PART NO.	REVISIONS								
FDFNY2-187(8)A	ECN #	REV	DESCRIPTION	DRAWN	DATE	CHECKD	DATE	APPRVD	DATE
	-	A	RELEASED	Veena	03/01/11	Jagan	03/01/11	Farnell	17/01/11

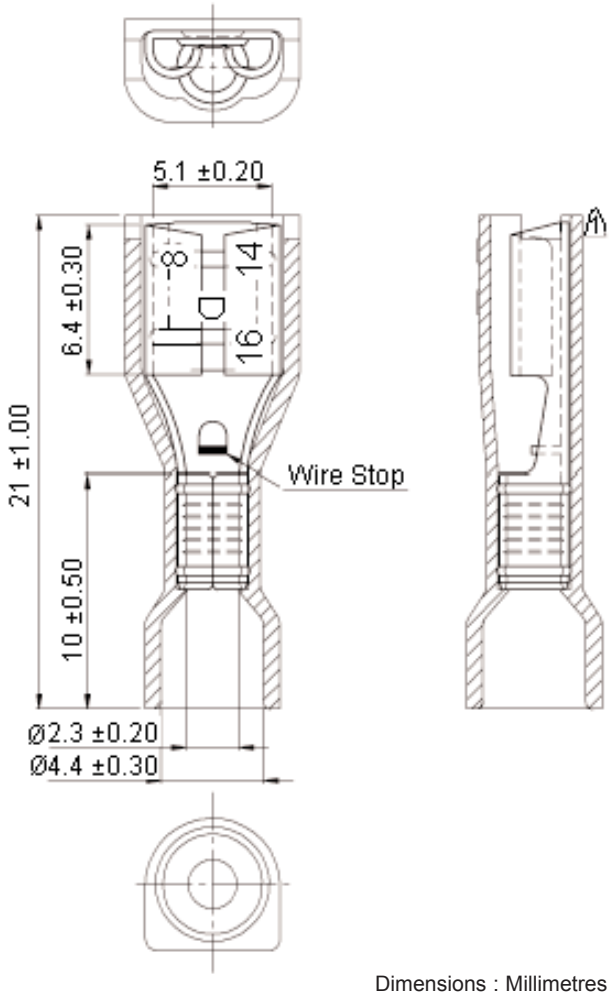

Dimensions : Millimetres

Specifications:

Maximum electric current :

AWG	16	14
Amperes	10	15

Maximum electrical rating : 105°C 600 volts.
Insulation material : Nylon.
Insulation colour : Blue.
Terminal material : Brass.
Wire range : 16 to 14 AWG (1.5 to 2.5mm^2).
Nema tab : 0.032 x 0.187 inch (0.8 x 4.75mm).
Terminal surface treatment : Tin plated.
Terminal thickness : 0.35mm.

Part Number Table

Description	Part Number
Crimp Terminal, Female, Blue, PK100	FDFNY2-187(8)A

http://www.farnell.com

http://www.newark.com

http://www.cpc.co.uk

This data sheet and its contents (the "Information") belong to the Premier Farnell Group (the "Group") or are licensed to it. No licence is granted for the use of it other than for information purposes in connection with the products to which it relates. No licence of any intellectual property rights is granted. The Information is subject to change without notice and replaces all data sheets previously supplied. The Information supplied is believed to be accurate but the Group assumes no responsibility for its accuracy or completeness, any error in or omission from it or for any use made of it. Users of this data sheet should check for themselves the Information and the suitability of the products for their purpose and not make any assumptions based on information included or omitted. Liability for loss or damage resulting from any reliance on the Information or use of it (including liability resulting from negligence or where the Group was aware of the possibility of such loss or damage arising) is excluded. This will not operate to limit or restrict the Group's liability for death or personal injury resulting from its negligence. SPC MULTICOMP is the registered trademark of the Group. © Premier Farnell plc 2011.

TOLERANCES:

UNLESS OTHERWISE SPECIFIED, DIMENSIONS ARE FOR REFERENCE PURPOSES ONLY.

DRAWN BY:	DATE:
Veena	03/01/11
CHECKED BY:	DATE:
Jagan	03/01/11
APPROVED BY:	DATE:
Farnell	17/01/11

DRAWING TITLE: Crimp Terminal - Nylon, Female, Blue

SIZE	DWG NO.	ELECTRONIC FILE	REV
A	M10002527	FDFNY2-187(8)A_DWG	A

SCALE: NTS | U.O.M.: mm | SHEET: 1 OF 1