NAME:1000006199 OBJECT:2T_CAPACITOR_ASM DATE:30-Jul-08 14:05:11

SIZE	DRAWING NO.	REV	SHEET
C	97F5704	2	1

RBC PROPRIETARY AND CONFIDENTIAL INFORMATION

This document is the property of REGAL BELOIT CORPORATION ("RBC") including its subsidiaries and divisions and contains proprietary information of RBC. This document is loaned on the express condition that neither it nor the information contained therein shall be disclosed to others without the express written consent of RBC, and that the information shall be used by the recipient only as approved expressly by RBC. This document shall be returned to RBC upon its request. This document may be subject to certain restrictions under U.S. export control laws and regulations.

REVISIONS

REV.	DESCRIPTION	DATE	APPROVED
1	Modified as per ECN No. 0627	11/11/05	HV
2	Modified as per ECN No. 0668 & 0673	7/18/08	HV

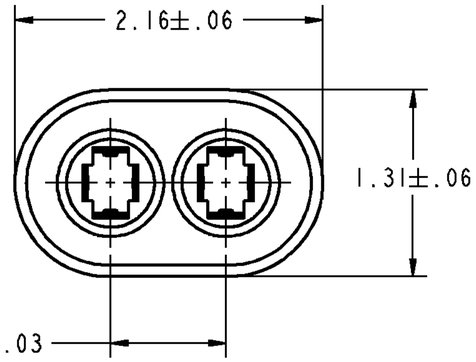

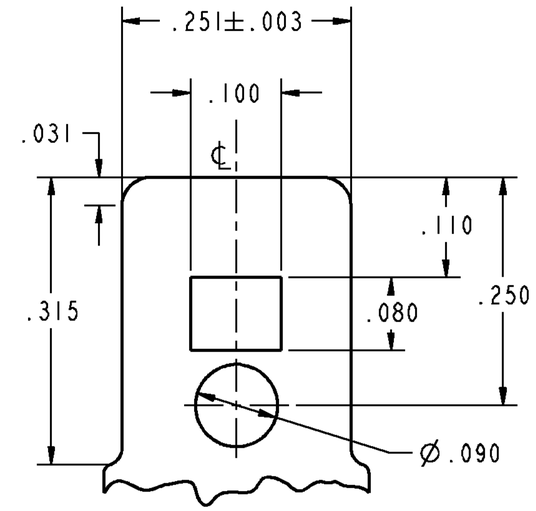

BLADE DETAILS

SCALE 8.000

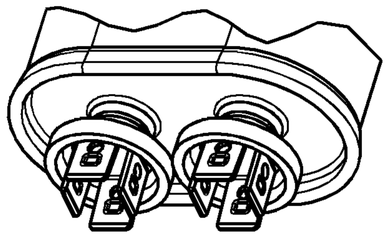

SCALE 1.500

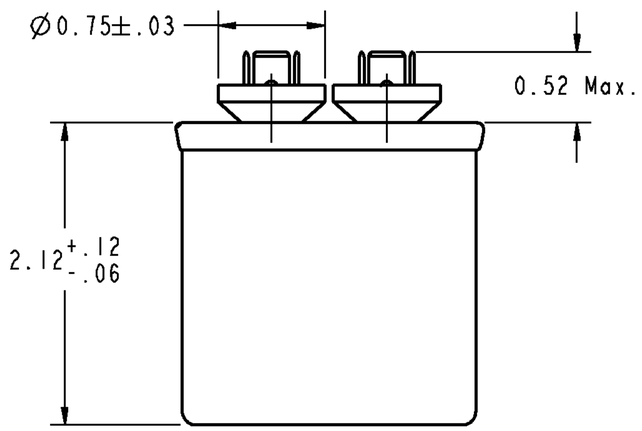

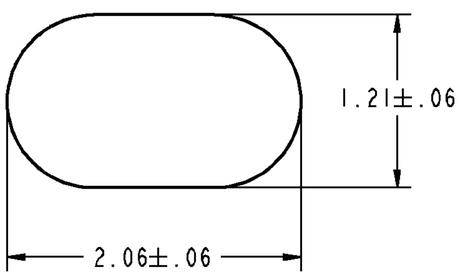

SPECIFICATIONS :

"GEM-III Capacitors are manufactured with High Grade Metallized Polypropylene Film"

Main Capacitance	: 4.00µF±6%
Secondary Capacitance	: NIL
Volts	:370AC
Leakage Current	:30µA Max.
Frequency	:50/60 HZ
Operating Temperature	:-40 DEG C TO 70 DEG C
Storage Temperature	:-40 DEG C TO 90 DEG C
Operative Life	:60,000 HRS WITH 94% SURVIVAL
Dissipation Factor	:0.1% MAX.
Case Material	:ALUMINIUM
Cover Material	:STEEL TIN PLATED
Terminals	: 0.250"x0.031" Quick Connect Blades
Dielectric Fluid	:DIELEKTROL VI
Internal Protection	: UL RECOGNIZED PSI AI0000AFC

THIRD ANGLE PROJECTION

FOR ADDITIONAL INFO REFER TO:
APPLIED PRACTICES .
UNLESS OTHERWISE SPECIFIED DIMENSIONS ARE IN INCHES
TOLERANCE ON:
1 PL DECIMALS ± 0.1
2 PL DECIMALS ± 0.01
3 PL DECIMALS ± 0.001
ANGLES ± 0.5
FRACTIONS ± .
FINISH ✓
MATERIAL .

SIGNATURES		DATE
MODEL	NPS	07/25/08
DETAIL	NPS	07/25/08
CHECKED	HV	07/25/08
ENGRG	.	.
MFG	.	.
QUALITY	.	.
ISSUED	.	.

SOLID MODEL: 2TCAPACITOR_ASM

REGAL BELOIT — REGAL-BELOIT CORPORATION

TITLE
GEM III CAPACITOR
OUTLINE DRAWING

SIZE	DRAWING	REV
C	97F5704	2

SCALE: 1.250 | REF. No: . | SHEET 1 OF 1