ENG. NO SD 35750-06*0

EDP NO.

SIMILAR ITEM

PROJECT NO. Ø3.2 RING TM'L

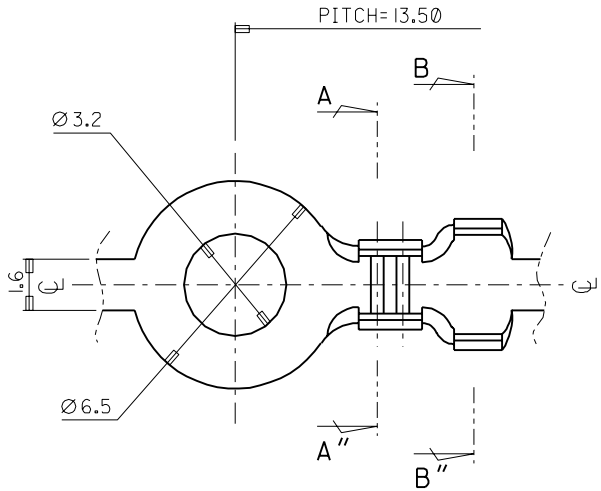

NOTES

1. MATERIAL : BRASS , 0.5mm THICKNESS
2. FINISH : 35750-0600 : UNPLATED
   35750-0610 : POST PLATED TIN
   35750-0640 : POST PLATED TIN-LEAD
3. RECOMMENDED LENGTH OF WIRE STRIP IS 3.0-3.6mm.

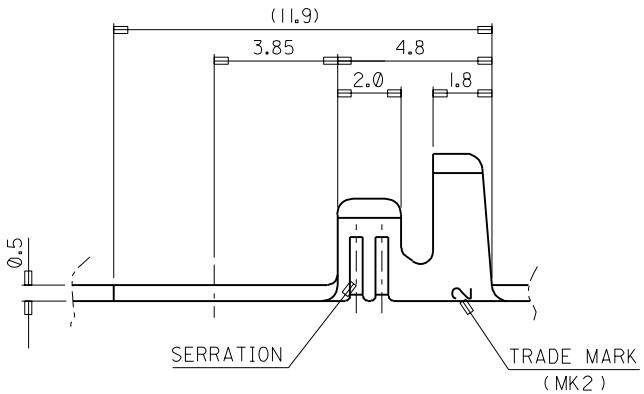

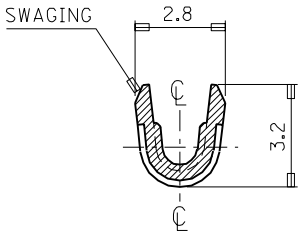

SEC' : A-A"

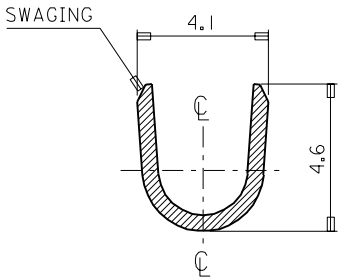

SEC' : B-B"

DO NOT SCALE DRAWING
DIMENSION IN METRIC

LTR	REVISION RECORD	ECN	DR. / CHK	DATE
C	REVISED	93-022		93 10.6
B	REVISED	93-019		93 8.17
A	CAD REDRAWING			93 7.5

ASS'Y PART DESCRIPTION	ASS'Y PART ENG.NO.	QTY/REEL OR PACK	SURFACE AREA
		10,000 Q'TY /REEL	MM²
		DIE NO.	LAYOUT NO.
		WIRE CRIMP WIDTH	INS. CRIMP WIDTH
DIE FEED	APPL FEED 13.50	WBDW	IBDW

MATERIAL SEE NOTES

DIMENSION CLASSIFICATION
■▼ : CRITICAL ⊠ : MAJOR
□ : MINOR ( ) : REFERENCE

DRAWN BY J.S.KANG
CHK'D BY B.K.CHOI
APP'D BY
SCALE 7/1

WIRE RANGE AWG: #20-#16 MM²: 0.5-1.4
INSULATION RANGE Ø2.6-3.5

GENERAL TOLERANCES
DIM. : ±0.30
ANGLE : ±0.20

molex MOLEX-KOREA CO.,LTD.

REVISE ONLY ON CAD SYSTEM

TITLE: Ø3.2 RING TM'L(U/I) 1 of 1

ENG.NO. SD 35750-06*0

REV C

MK-9