MATERIAL NUMBER	# OF COLUMNS	DIM "A" MAX	DIM "B"
75710-***5	5	25.90	14.80
75710-***6	6	29.60	18.50
75710-***8	8	37.00	25.90
75710-***0	10	44.40	33.30

75710-****

MODULE TYPE -- TAIL PLATING TYPE
GUIDE RIGHT -- TIN/LEAD = 4
GUIDE RIGHT -- TIN ONLY = 5

POLARIZATION KEY ORIENTATION
0 = NO KEY
1 = A 5 = E
2 = B 6 = F
3 = C 7 = G
4 = D 8 = H

# OF COLUMNS
05 = 5 COL
06 = 6 COL
08 = 8 COL
10 = 10 COL
55 = 5 COL W/ESD
56 = 6 COL W/ESD
58 = 8 COL W/ESD
50 = 10 COL W/ESD

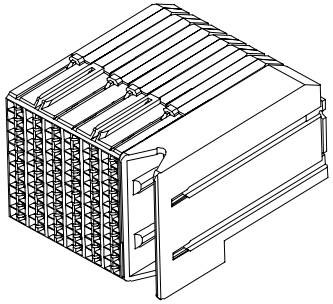

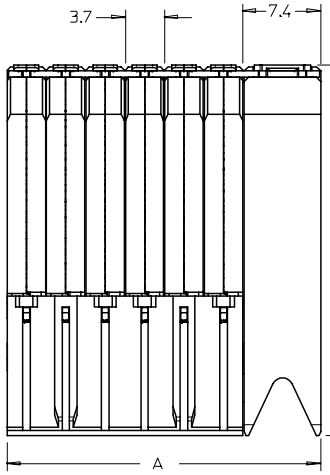

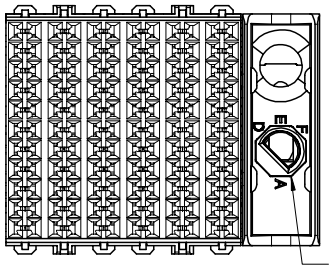

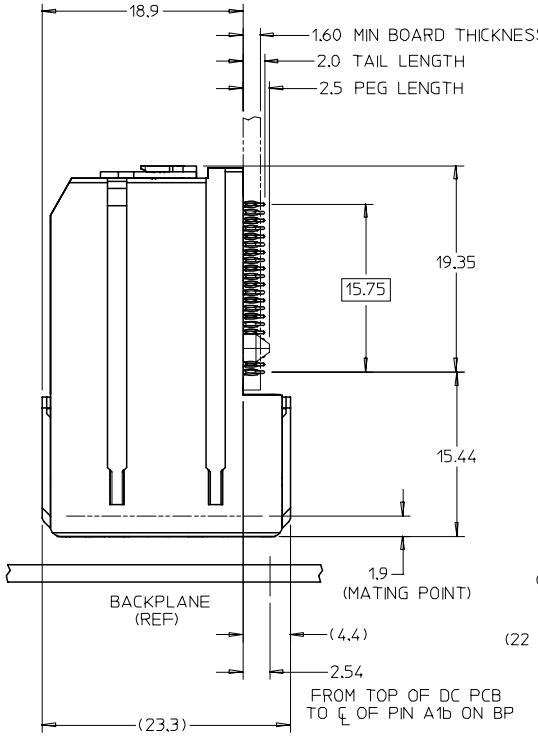

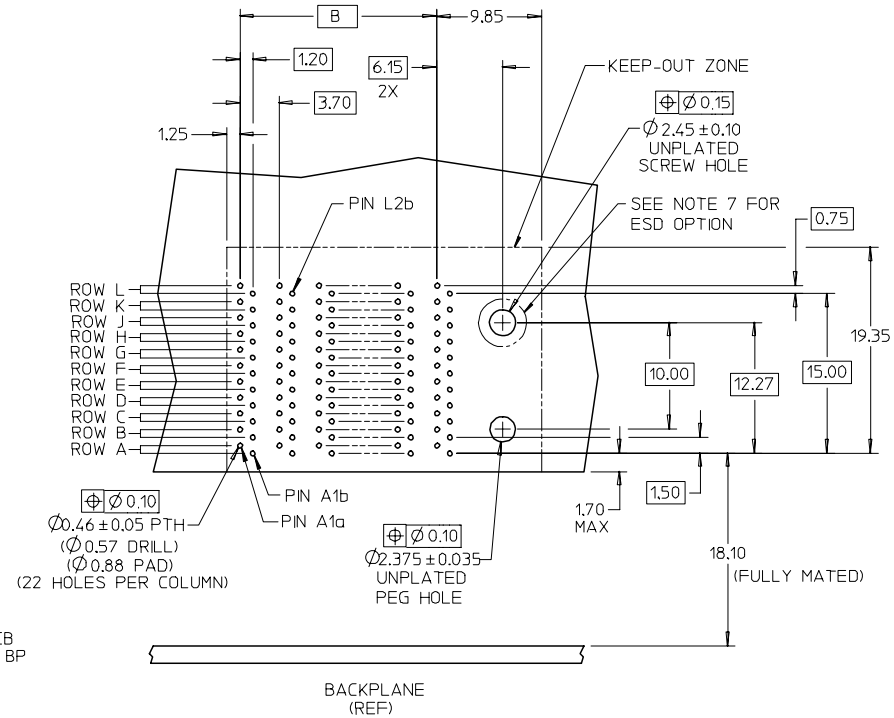

DAUGHTERCARD HOLE PATTERN
(CONNECTOR SIDE)

NOTES:
1. MATERIALS: HOUSING - LIQUID CRYSTAL POLYMER (LCP) GLASS-FILLED, UL94V-0
   TERMINALS - HIGH PERFORMANCE COPPER ALLOY
2. FINISH: 30uIN MIN GOLD IN CONTACT AREA, SELECTIVE TIN/LEAD (-4***)
   OR SELECTIVE TIN (-5***) ON PCB TAILS, NICKEL OVERALL.
3. REFER TO MOLEX PRODUCT SPECIFICATION PS-75710-999 FOR PERFORMANCE SPECS.
4. PRODUCT IS PACKAGED PER PK-70873-609.
5. THIS PART CONFORMS TO CLASS B REQUIREMENTS OF COSMETIC SPEC PS-45499-002.
6. GUIDED PARTS TO BE SHIPPED WITH 2-32 TYPE AB
   SELF-TAPPING SCREW P/N 73726-0000.
7. FOR GROUNDED GUIDE MODULES USE DIA 2.45+/-0.10 (PTH), DIA 2.58 (DRILL),
   AND DIA 4.50 (PAD).

REV	DESCRIPTION
	ADD ESD OPTION
	EC NO: UCP2007-2348
	DRWN:BPISZCZOR 2007/03/19
	CHKD: 2007/03/19
	APPR: JLAURX 2007/03/19

QUALITY SYMBOLS
▼=0
▽=0

GENERAL TOLERANCES (UNLESS SPECIFIED)	mm	INCH
4 PLACES	± ---	± ---
3 PLACES	± ---	± ---
2 PLACES	± 0.13	± ---
1 PLACE	± 0.25	± ---
ANGULAR ±1/2°		

DRAFT WHERE APPLICABLE MUST REMAIN WITHIN DIMENSIONS

DIMENSION STYLE: MM ONLY	SCALE: 3:1	DESIGN UNITS: METRIC
THIRD ANGLE PROJECTION		
DRAWN BY: JLAURX	DATE: 2/17/05	TITLE: I-TRAC DAUGHTERCARD 11 ROW SIGNAL MODULE GUIDE RIGHT SALES DWG
CHECKED BY: NMARTIN	DATE: 2/17/05	
APPROVED BY: CBIXLER	DATE: 2/17/05	molex MOLEX INCORPORATED
MATERIAL NO.: SEE CHART	DOCUMENT NO.: SD-75710-004	SHEET NO.: 1 OF 1
SIZE: C		

THIS DRAWING CONTAINS INFORMATION THAT IS PROPRIETARY TO MOLEX INCORPORATED AND SHOULD NOT BE USED WITHOUT WRITTEN PERMISSION