Customer Information Sheet

DRAWING No.: M20-11800XX	SHEET 2 OF 2	IF IN DOUBT - ASK	©	NOT TO SCALE	THIRD ANGLE PROJECTION	ALL DIMENSIONS IN mm

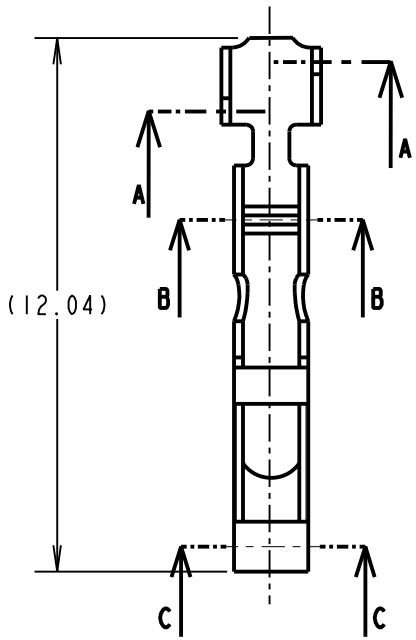

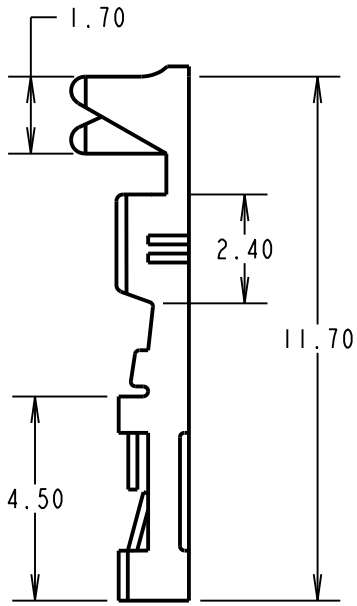

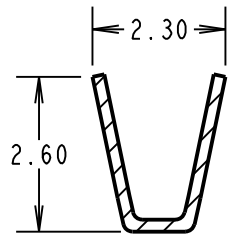

SECTION A-A

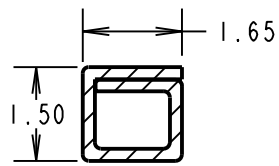

SECTION C-C

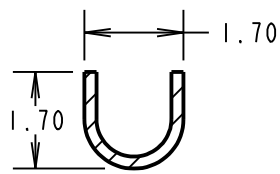

SECTION B-B

ORDER CODE:
M20-11800XX
FINISH:
42 = GOLD + 100% TIN
46 = 100% TIN OVER NICKEL

NOTES:
1. TO BE USED WITH CRIMP MOULDINGS M20-106XX00 AND M20-107XX00. SEE MOULDING DRAWING FOR COMPONENT SPECIFICATION.
2. CONTACTS SUPPLIED LOOSE IN QUANTITIES OF 100.
3. FOR COMPLETE SPECIFICATION, SEE COMPONENT SPECIFICATION C001XX (LATEST ISSUE).
4. ACCEPTS WIRE RANGE 22-30 AWG.
5. DIAMETER OF WIRE INSULATION = Ø1.60-0.90mm.
6. TO BE USED WITH HAND TOOL Z20-320, SEE INSTRUCTION SHEET IS-15 FOR DETAILS.
7. PRODUCT SUPPLIED ON REELS OF 10K.
8. STRIP WIRE BY 3.0 - 4.0mm FOR CRIMPING.

SPECIFICATIONS:
MATERIAL = BRASS
FINISH:
42 = GOLD + 100% TIN
46 = 100% TIN OVER NICKEL
MECHANICAL:
WITHDRAWAL FORCE = 1.5-0.8N

NAME	ISS.	DATE	C/NOTE
SM	12	05.10.11	11479

APPROVED: S. MCCULLAGH
CHECKED: R. ADDE
DRAWN: W.J.BOURNE
CUSTOMER REF.:
ASSEMBLY DRG:

HARWIN
www.harwin.com
technical@harwin.com

THIS DRAWING AND ANY INFORMATION OR DESCRIPTIVE MATTER SET OUT HEREON ARE CONFIDENTIAL AND COPYRIGHT PROPERTY OF THE HARWIN GROUP AND MUST NOT BE DISCLOSED, LOANED, COPIED OR USED FOR MANUFACTURING, TENDERING OR FOR ANY OTHER PURPOSE WITHOUT THEIR WRITTEN PERMISSION.

TOLERANCES
X. = ±1mm
X.X = ±0.25mm
X.XX = ±0.10mm
X.XXX = ±0.01mm
ANGLES = ±5°
UNLESS STATED

MATERIAL: SEE ABOVE
FINISH: SEE ABOVE
S/AREA: mm²

TITLE: 2.54mm FEMALE CRIMP TERMINAL (LOOSE)

DRAWING NUMBER: **M20-11800XX**

SHT 2 OF 2