THIS DRAWING IS UNPUBLISHED. RELEASED FOR PUBLICATION -,- .
© COPYRIGHT - By - ALL RIGHTS RESERVED.

LOC	DIST
J	—

REVISIONS 変更

P	LTR	DESCRIPTION	DATE	DWN	APVD
	C2	REVISED PER ECO-11-005140	28MAR11	RK	HMR

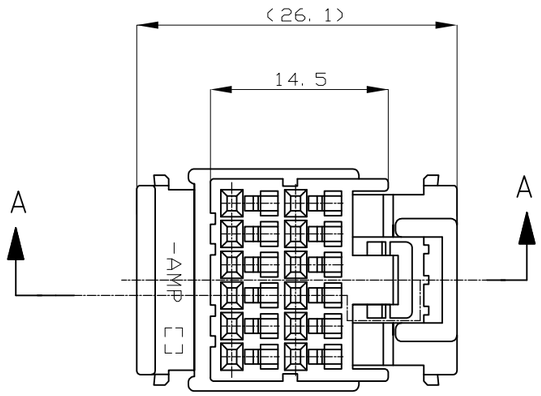

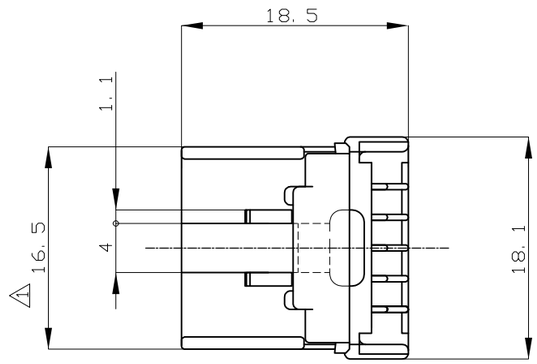

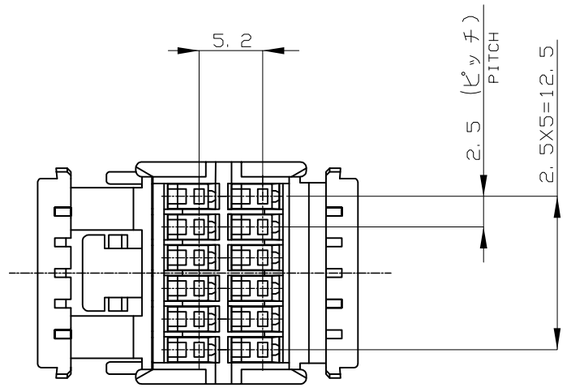

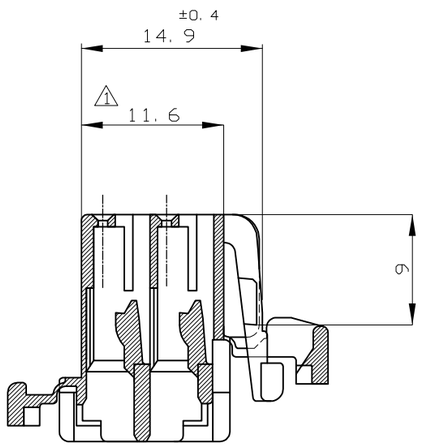

A-A

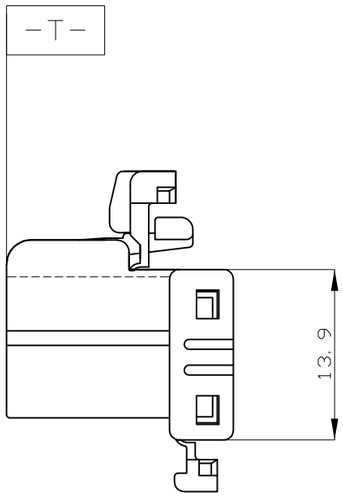

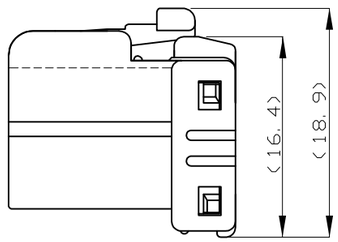

二重ロック時
DOUBLE LOCKED

青 (BLUE)	174045-5
緑 (GREEN)	174045-4
黒 (BLACK)	174045-2
色 (COLOR)	製品型番 (PART NO.)

△1 TO BE MEASURED WITHIN 2mm FROM -T-

△1 -T- 面より2mmの範囲で測定

TOLERANCE UNLESS OTHERWISE SPECIFIED: 一般公差

0<x≤ 10	:	±0.2
10<x≤ 30	:	±0.25
30<x≤100	:	±0.3
ANGLE ; 角度		±3°

THIS DRAWING IS A CONTROLLED DOCUMENT.

DIMENSIONS: 単位: 粍 mm

TOLERANCES UNLESS OTHERWISE SPECIFIED: 一般公差

0 PLC	±-
1 PLC	±-
2 PLC	±-
3 PLC	±-
4 PLC	±-
ANGLES	±-

MATERIAL 材料: PBT

FINISH 仕上: -

DWN	M.SUGAWARA	03AUG06
CHK	K.BETSUI	03AUG06
APVD	K.BETSUI	03AUG06
PRODUCT SPEC 製品規格	108-5352,5244	
APPLICATION SPEC 取付適用規格	—	
WEIGHT	—	

TE Connectivity

NAME 名称: 12POSITION PLUG HOUSING 040SERIES MULTI-LOCK CONNECTOR

SIZE	CAGE CODE	DRAWING NO 番号	RESTRICTED TO
A3	00779	C-174045	—

CUSTOMER DRAWING | SCALE 尺度 2:1 | SHEET 1 OF 1 | REV C2