THIS DRAWING IS UNPUBLISHED. RELEASED FOR PUBLICATION - ,- .
© COPYRIGHT - By - ALL RIGHTS RESERVED.

LOC	DIST
AD	00

REVISIONS

P	LTR	DESCRIPTION	DATE	DWN	APVD
	A1	REVISED PER ECO-11-004917	11MAR11	RK	HMR

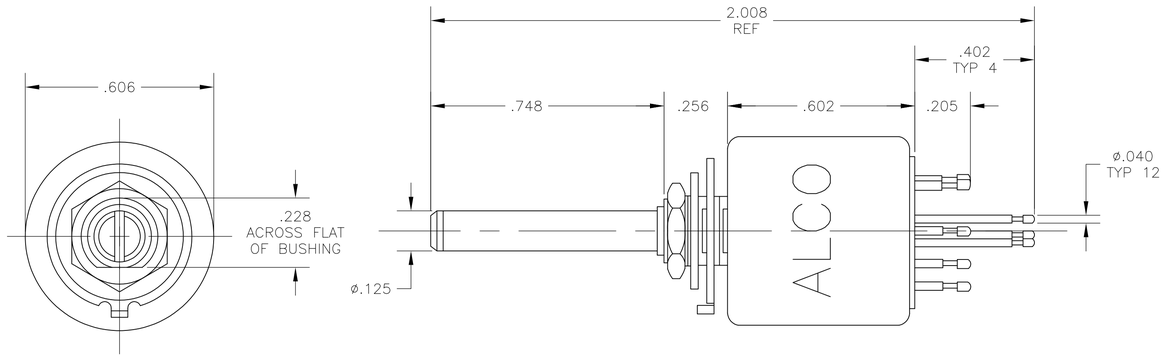

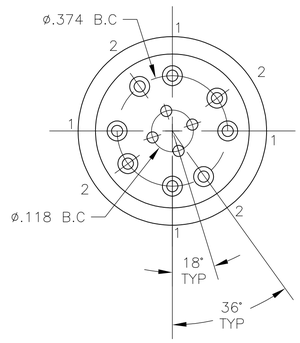

P.C MOUNTING DIMENSIONS

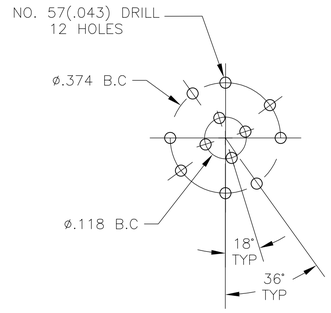

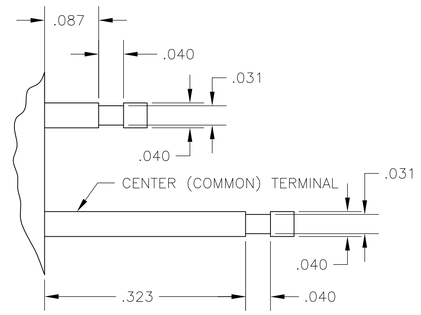

TYPICAL TERMINAL DETAIL

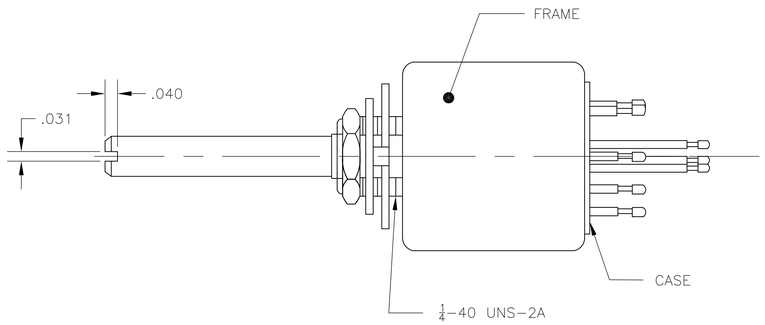

NOTES:

1. ALL MATERIALS AND FINISHES SHALL COMPLY WITH EU DIRECTIVE 2002 /95/EC OF 27JAN2003(RoHS).
2. CONTACT TIMING IS NON-SORTING.

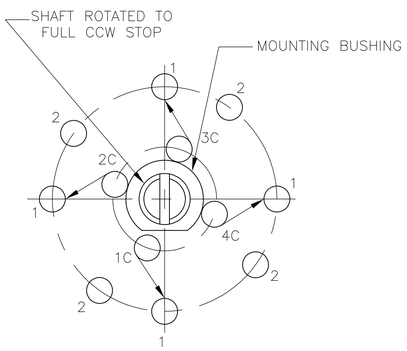

DIAGRAM LOOKING AT SHAFT END

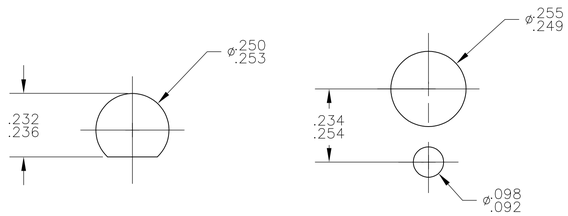

RECOMMONDED PANEL CUTOUTS
TO PREVENT ROTATION

MATERIALS		
COMPONENT NAME	BASE MATERIAL	FINISH
ROTOR	BRASS	NICKEL
ROTOR	EVOH RESIN, NATURAL, UL94HB	
CASE	DAP, GREEN, UL94V-O	
ACTUATOR TIP	POLYAMIDE, NATURAL, UL94HB	
FRAME	ALLUMINIUM	
MOUNTING SLEEVE	ZINC ALLOY	ZINC
SHAFT	BRASS	NICKEL
SPRING	MUSIC WIRE	OIL TREATED
CONTACT SPRING	MUSIC WIRE	OIL TREATED
COMMON	SILVER	
STOP RING	SPRING STEEL	ZINC
STOPPER	STEEL	ZINC
HEX.NUT	BRASS	NICKEL
LOCATING RING	STEEL	ZINC
LOCK WASHER	STEEL	ZINC
MOVABLE CONTACT ARM	SILVER	GOLD
COMMON TERMINAL	BRASS	GOLD
CONTACTS	AgCuZn ALLOY	GOLD OVER NICKEL
STEEL BALL	STEEL	
LABEL	TETRON FILM	

SPECIFICATIONS	
RATING	.5A @ 125VAC OR 28VDC, RESISTIVE
INITIAL CONTACT RESISTANCE	10 milliohms MAX @ 1A, 2-4 VDC
INITIAL INSULATION RESISTANCE	100 megaohms min, TERMINAL TO TERMINAL, TERMINAL TO FRAME
INITIAL DIELECTRIC WITHSTANDING VOLTAGE	1000 VAC, (50-60HZ) FOR 1 min BETWEEN TERMINAL AND GROUND
DURABILITY	10,000 cycles min AT RATED CURRENT, 5-10 cycles PER min
OPERATING FORCE	14 IN OZ MAX. TORQUE

MRC42S04	1825502-1
ALCO P/N	P/N

THIS DRAWING IS A CONTROLLED DOCUMENT.

DIMENSIONS: INCHES

TOLERANCES UNLESS OTHERWISE SPECIFIED:
0 PLC ± -
1 PLC ± -
2 PLC ± -
3 PLC ± -
4 PLC ± -
ANGLES ± -

MATERIAL: SEE TABLE
FINISH: SEE TABLE

DWN B.S. VISWESWARA 22MAY06
CHK -
APVD -
PRODUCT SPEC —
APPLICATION SPEC —
WEIGHT —

TE Connectivity

NAME: ROTARY SWITCH WITH KNOB 4 POLE, 2 POSITIONS

SIZE A1 | CAGE CODE 00779 | DRAWING NO C-1825502 | RESTRICTED TO —

CUSTOMER DRAWING | SCALE 4:1 | SHEET 1 OF 1 | REV A1

4805 (3/11)