THIS DRAWING IS UNPUBLISHED. RELEASED FOR PUBLICATION -,- .
© COPYRIGHT - BY TYCO ELECTRONICS CORPORATION. ALL RIGHTS RESERVED.

LOC	DIST
FT	0

REVISIONS

P	LTR	DESCRIPTION	DATE	DWN	APVD
	01	REVISED PER ECO-07-024369	10/16/07	SS	SRY
	02	REVISED PER ECO-09-024927	16NOV09	KK	AEG

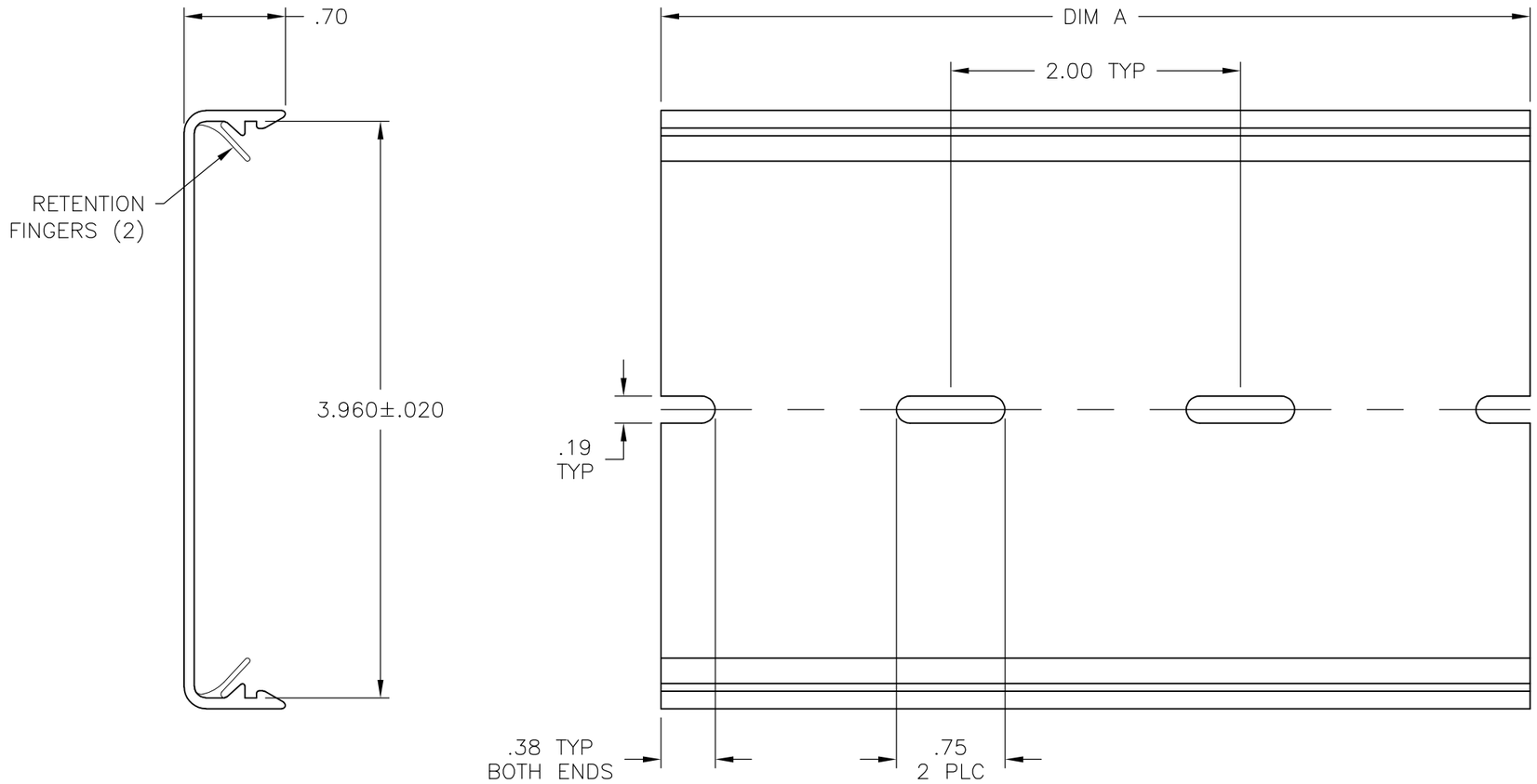

2	6.00±.03	NO	6TK2-6-MOD1A	1546763-2
1	48.00+.25/-.03	NO	6TK2-48-MOD1	5-1437685-1
4 OBSOLETE 1	10.00±.03	NO	6TK2-10-MOD1	~~4-1437685-5~~
1	6.00±.03	NO	6TK2-6-MOD1	1546753-1
1	6.00±.03	YES	6TK2-6	5-1437685-5
MATERIAL	DIM A	RETENTION FINGER	CATALOG NO.	PART NO.

NOTES:

1. MATERIAL: RIGID PVC, COLOR GRAY.
2. MATERIAL: RIGID PVC, COLOR NATURAL.
3. RECOMMENDED PC BOARD WIDTH: 4.00".
4. OBSOLETE PARTS: OBSOLETE CIS STREAMLINING PER D.RENAUD/D.SINISI

THIS DRAWING IS A CONTROLLED DOCUMENT.

DIMENSIONS: INCHES

TOLERANCES UNLESS OTHERWISE SPECIFIED:
0 PLC ± -
1 PLC ± -
2 PLC ± .015
3 PLC ± .005
4 PLC ± -
ANGLES ± 1°

MATERIAL

FINISH -

DWN S SCHLEGEL 8/2/04
CHK S YODER 8/2/04
APVD S YODER 8/2/04
PRODUCT SPEC —
APPLICATION SPEC —
WEIGHT —

Tyco Electronics
Tyco Electronics Corporation
Harrisburg, PA 17105-3608

NAME 6TK2-6 SNAPTRACK
—
—

SIZE	CAGE CODE	DRAWING NO	RESTRICTED TO
A3	00779	C-5-1437685-5	—

CUSTOMER DRAWING | SCALE NTS | SHEET 1 OF 1 | REV 02