THIS DRAWING IS UNPUBLISHED. RELEASED FOR PUBLICATION -,- .
© COPYRIGHT - BY TYCO ELECTRONICS CORPORATION. ALL INTERNATIONAL RIGHTS RESERVED.

LOC	DIST
GP	00

REVISIONS

P	LTR	DESCRIPTION	DATE	DWN	APVD
	C	REV PER ECO 11-018203	06SEP11	JR	GJ

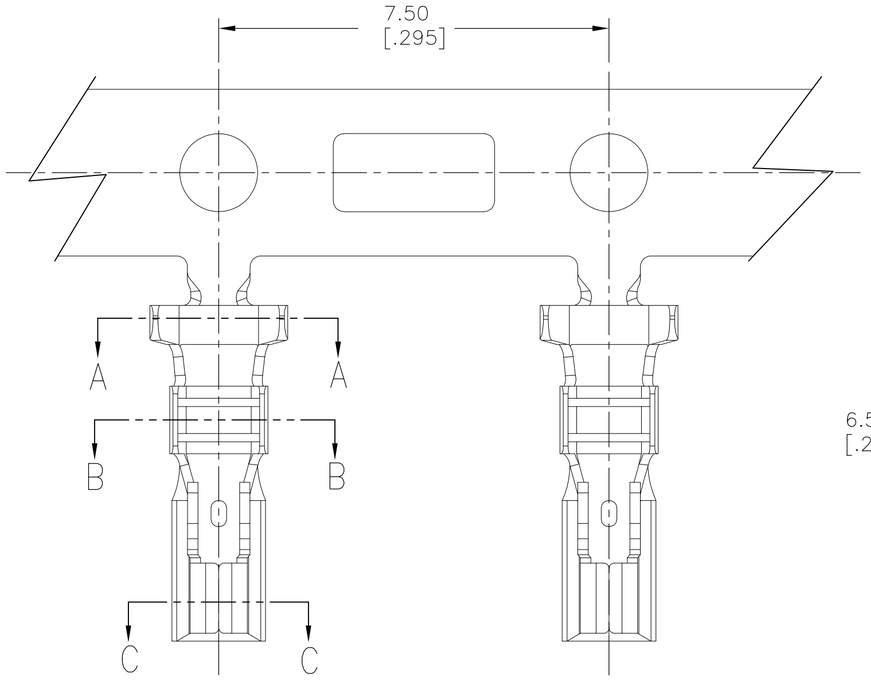

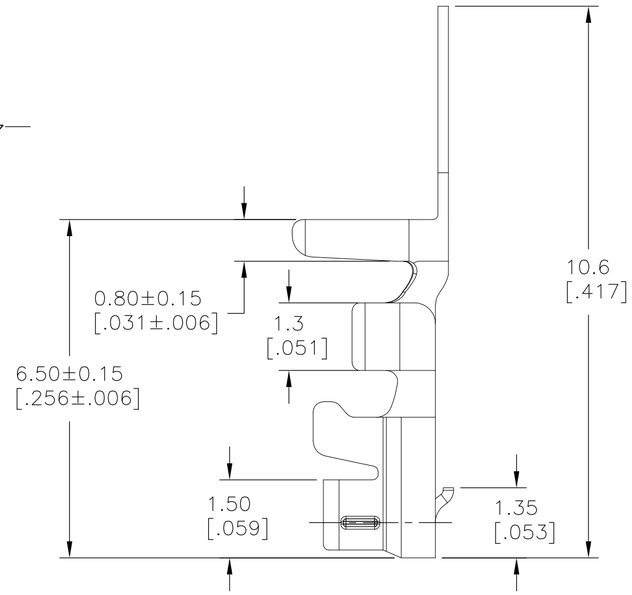

1. MATERIAL: PHOSPHOR BRONZE
2. FINISH: POST TIN PLATE OVER NICKEL
3. DESIGNED FOR USE IN HOUSINGS 1969442-( ) OR 2110992-( ).
4. CONTACTS COATED WITH ANTI-FRETTING LUBRICANT.
5. CONTACT IS RoHS COMPLIANT.
6. WIRE RANGE: 0.13-0.30mm2 [22-26 AWG] STRANDED.
7. INSULATION RANGE: 1.3-1.7 [.051-.067]

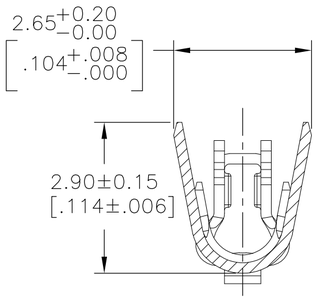

SEC A-A

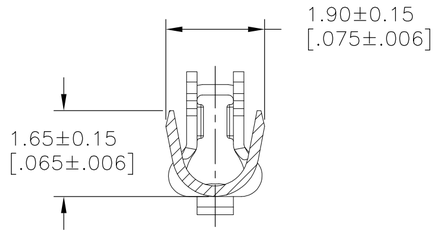

SEC B-B

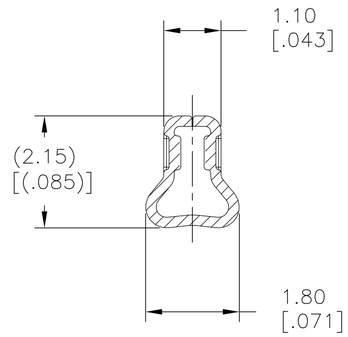

SEC C-C

2110989

2110989-1

PART NUMBER

THIS DRAWING IS A CONTROLLED DOCUMENT.

DIMENSIONS: mm [INCHES]

TOLERANCES UNLESS OTHERWISE SPECIFIED:
0 PLC ± -
1 PLC ± -
2 PLC ± 0.13[.005]
3 PLC ± -
4 PLC ± -
ANGLES ± -

MATERIAL - 1
FINISH - 2

DWN	C.ROHLER	30SEP2009
CHK	C.ROHDE	30SEP2009
APVD	C.ROHDE	30SEP2009
PRODUCT SPEC	108-2418	
APPLICATION SPEC	—	
WEIGHT	—	

CUSTOMER DRAWING

Tyco Electronics
Tyco Electronics Corporation
Harrisburg, PA 17105-3608

NAME
CONTACT, ECONOMY POWER 2.5
—
—

SIZE	CAGE CODE	DRAWING NO	RESTRICTED TO
A2	00779	C-2110989	—

SCALE	SHEET	REV
12:1	1 OF 1	C