THIS DRAWING IS UNPUBLISHED. RELEASED FOR PUBLICATION -,- .
© COPYRIGHT - By - ALL RIGHTS RESERVED.

LOC	DIST
CM	53

REVISIONS

P	LTR	DESCRIPTION	DATE	DWN	APVD
	D1	REVISED PER ECO-11-005027	11MAR11	RK	HMR

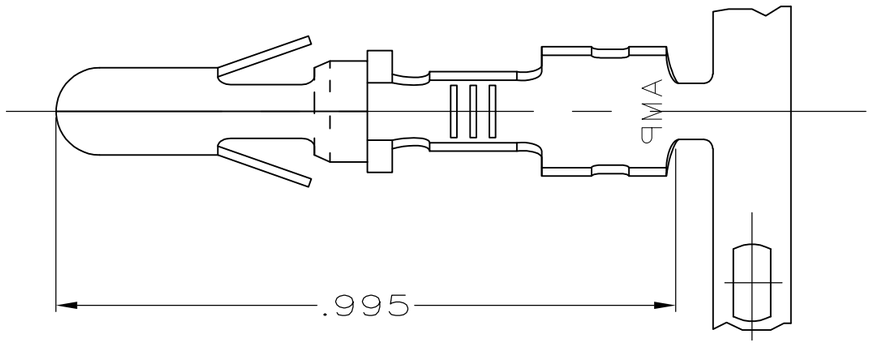

1 SWAGE, INSULATION BARREL ONLY.

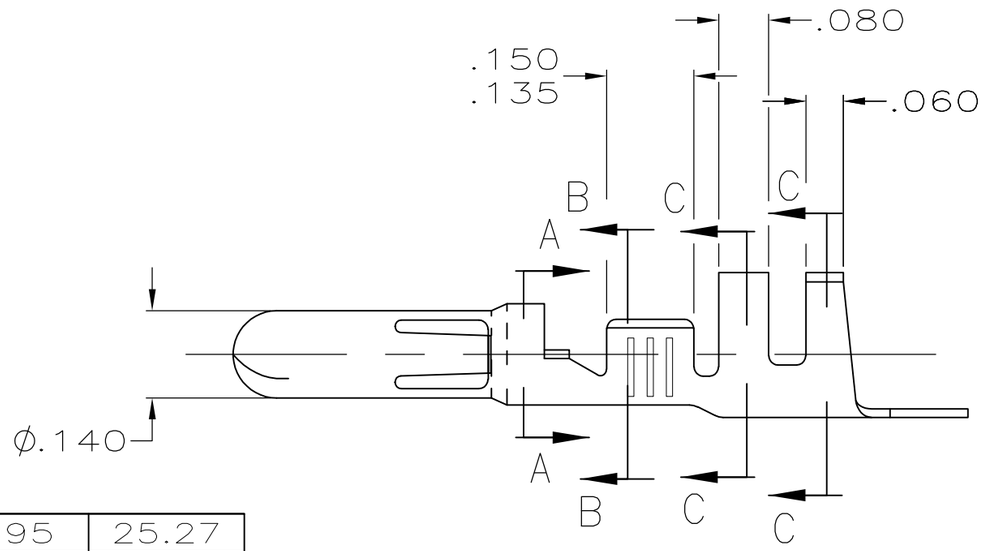

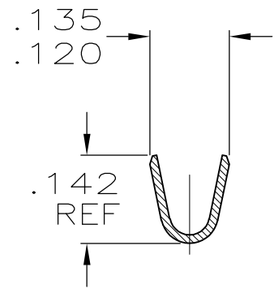

SECTION B-B

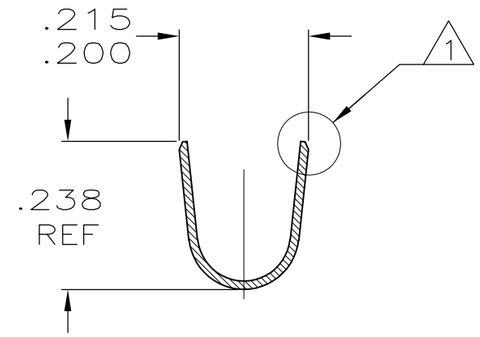

SECTION C-C

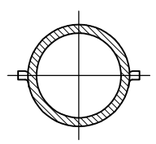

SECTION A-A

.995	25.27
.238	6.05
.215	5.46
.200	5.08
.150	3.81
.142	3.61
.140	3.56
.135	3.43
.120	3.05
.080	2.03
.060	1.52
.014	0.36
.005	0.13
IN	MM

CONVERSION TABLE

METRIC

	TIN	.014 PH. BRZ	61627-2
350389-1	TIN	.014 BRASS	61627-1
LOOSE PIECE (REF)	FINISH	MATERIAL	PART NUMBER

THIS DRAWING IS A CONTROLLED DOCUMENT.

DIMENSIONS: INCHES

TOLERANCES UNLESS OTHERWISE SPECIFIED:

0 PLC	± -
1 PLC	± -
2 PLC	± -
3 PLC	± .005
4 PLC	± -
ANGLES	± 1

MATERIAL: SEE TABLE

FINISH: SEE TABLE

DWN L. SMITH 4-07-94
CHK R. SWING 4-07-94
APVD C. MARTIN 4-11-94
PRODUCT SPEC —
APPLICATION SPEC —
WEIGHT —

TE Connectivity

NAME: .140 DIA PIN —

SIZE	CAGE CODE	DRAWING NO	RESTRICTED TO
A3	00779	C-61627	—

CUSTOMER DRAWING

SCALE 4:1 SHEET 1 OF 1 REV D1

1470-19 (3/11)