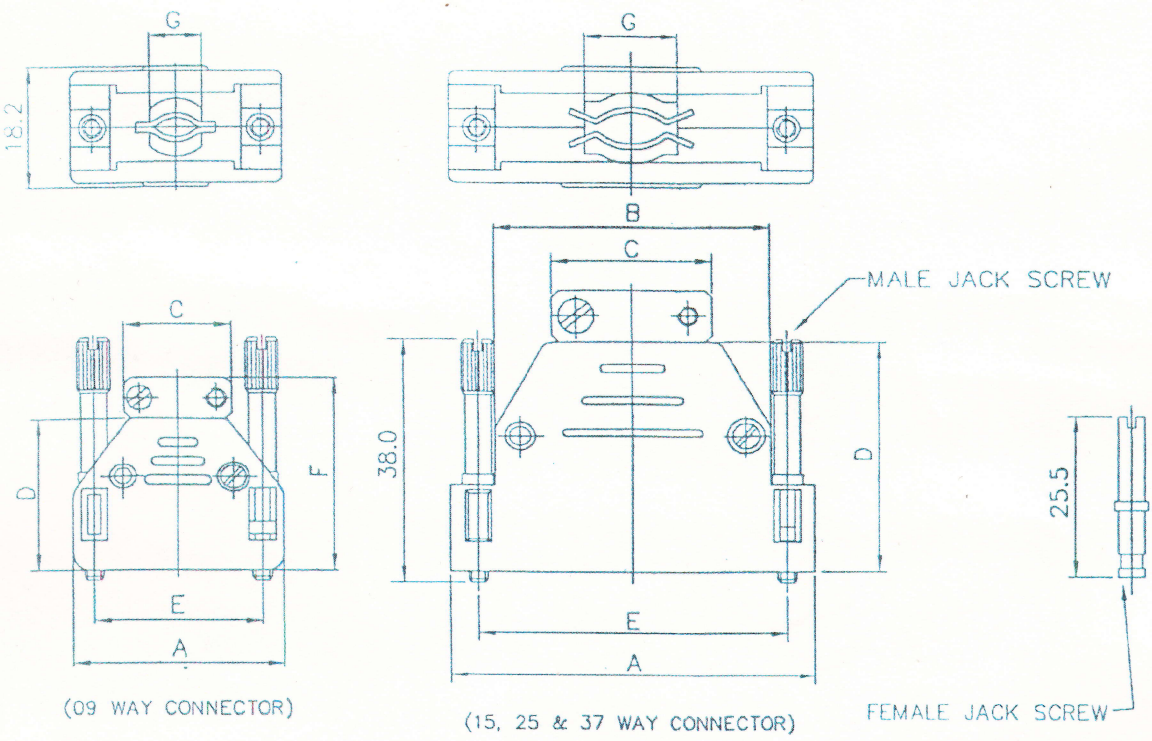

No. of Ways	*Male Jack Screw	Female Jack Screw	A	B	C	D	E ±0.1	F	G
09	D 09T	D 09TF	31.4	–	14.5	24.0	25.0	32.0	7.9
15	D 15T	D 15TF	42.0	28.5	14.3	30.0	33.3	38.0	10.0
25	D 25T	D 25TF	55.5	41.9	25.1	36.0	47.0	44.0	14.2
37	D 37T	D 37TF	69.8	57.5	39.2	38.0	63.5	46.0	18.0

* Add suffix '3' for male jack screw with M3 threads e.g. D 09T3.

Characteristics:

* Male/Female Jack Screaw having 4–40 UNC threads.
* External cable clamp, top cable entry.

Material:

Hood: ABS.
Screws: Steel, Zinc plated.

ISS.	DATE	MODIFICATION	SIGN.
1	30.04.09		

TOLERANCES UNLESS OTHERWISE SPECIFIED ±0.1

TOP CABLE ENTRY HOODS

09 TO 37 WAYS

DIMENSIONS IN MM

	DATE	SIGN.
DESIGN	30.04.09	
DRAWN	30.04.09	
CHKD.		
APPD.		

SCALE ~

DRG. NO. DHDCU–016. A4.

SHEET 1 OF 1

Computer4\productscan\ELECTRONICS\DHDCU

MH