DRG No.	80146	ISS No. G
PART No.	8100800	

IF IN DOUBT - ASK

PROJECTION: THIRD ANGLE

DRAWING TO BE READ IN CONJUNCTION WITH BS 308

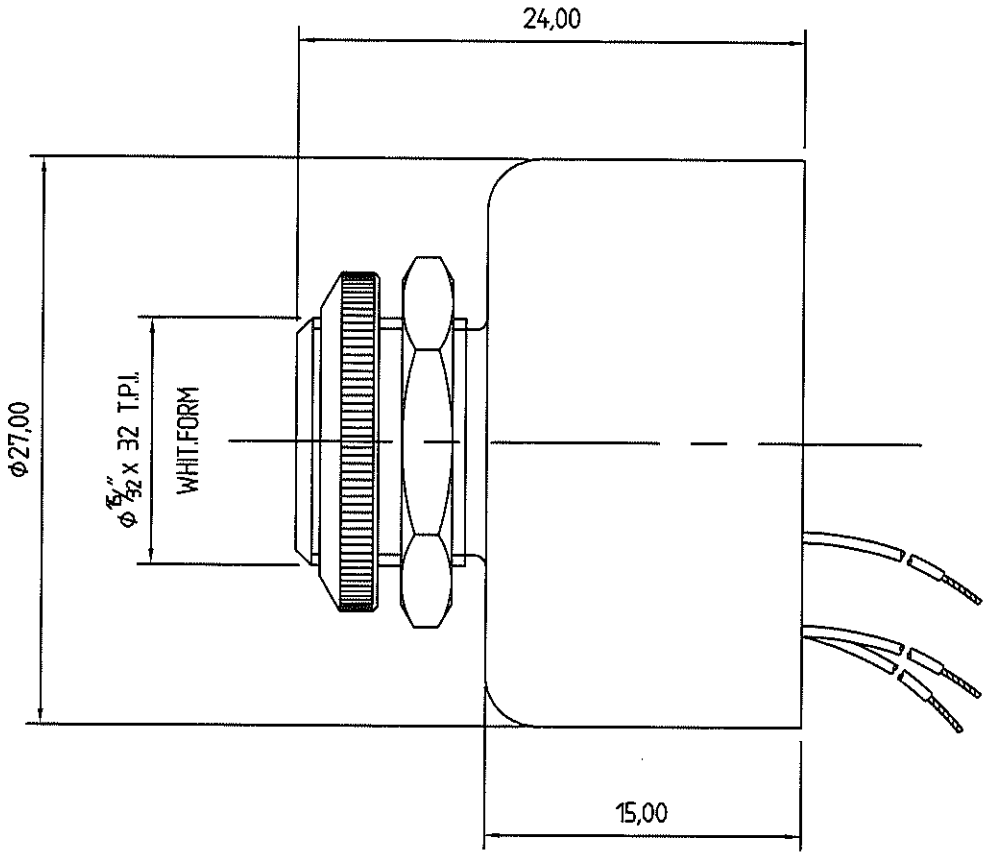

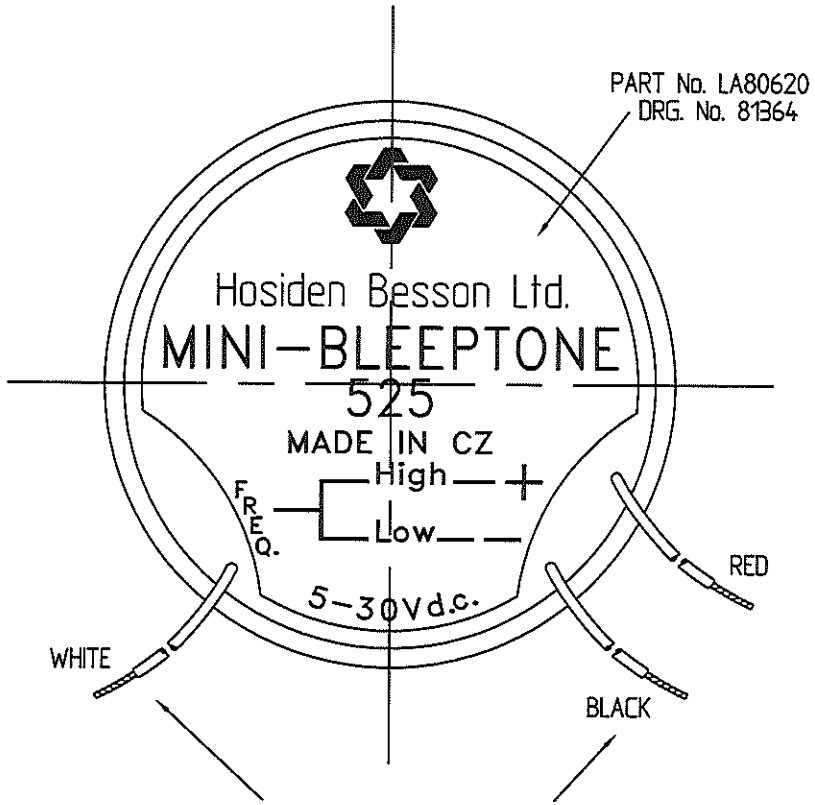

ISS	REVISION	CHANGE	INIT	DATE
G	WAS 'MADE IN ENGLAND' NOW 'CZ' LABEL DRG. No. WAS 4276 NOW 81364	CN1635	H.H.	20.7.98
F	AQL WAS 0,65% NOW 0% REDRAWN ON CAD.	CN1512	H.H.	20.5.98
E	NEW LABEL FORMAT & PROD. CODE ADDED	DC2617	PGB	19.2.91
D	INTL. CONSTRN. DRG. CHANGED PROD. CODES DELETED.	DC2220	T.A.	25.4.89
C	AQL 1% ADDED. 'LTD' DELETED FROM LABEL	DC0908	PAA	5.9.85
B	PRODUCTION CODE 8100400 - ADDED	DC0397	T.A.	16.1.85
A			P.A.	28.4.80

FOR INTERNAL CONSTRUCTION SEE DRAWING No. 80838

REMOVE BURRS & SHARP EDGES

ALL DIMENSIONS ARE IN MM

Hosiden Besson Ltd.

St.Joseph's Close,Hove,East Sussex BN3 7EZ,England
Tel: General (01273) 860000. International 44 1273 860000
Sales (01273) 861166. Fax: (01273) 777501.

MATERIAL

FINISH

METRIC TOLERANCES UNSPECIFIED
± 0.1 Dim to 2 dec places
± 0.2 Dim to 1 dec place
±2 °Angular

DRAWN	H.HANSEN.
CHECKED	T.A.
APPROVED	P.T.
SCALE	4 : 1
AQL	%

OUTLINE DRAWING ~ MINIBLEEPTONE ~ 525

DRG. NO. 80146 ISS No. G A3