受控 CONTROLLED DOCUMENT					
编号 P/N	CP1094AST-CUST	版本 Rev	02	日期 Rel'd Date	Aug4,11

Description:	Front Mount Bulkhead Jack receptacle with Solder TAB
Part No:	CP1094AST
Application:	PCB
Crimp Tool:	N/A
Impedance:	50 Ohms
Frequency Range:	0-4 GHz
Material:	Body Brass Nickel plated
	Contact BERYLLIUM Ni/Au PLATED
	Insulotor Teflon
	Nut Brass Nickel plated
RoHS Compliance:	Yes
Technical Detail:	Refer to Emerson Document P/N 27-0000

DRAWING NO.
CP1094AST - CUST

REVISIONS

01	OFFICIAL RELEASE					
	03-20-09	TW	BY	T		
02	RELEASE FOR SUPPLIER ALTER					
	07-27-11	YG	YG	ML		lma 2011.07.28 14:48:44 +08'00'

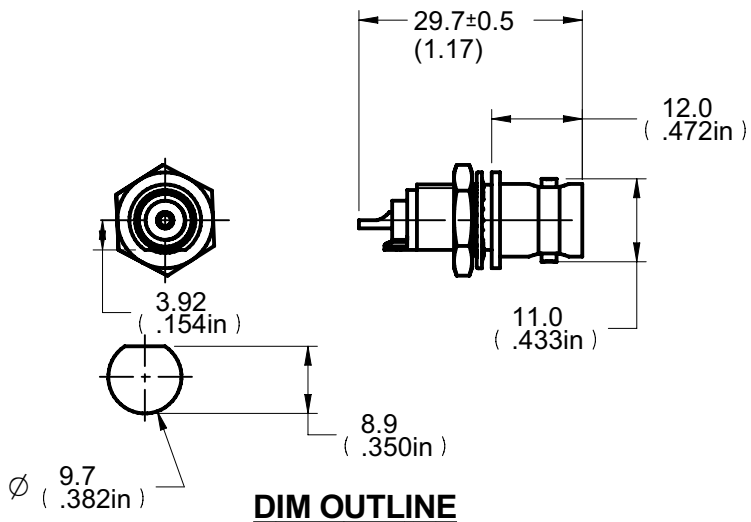

DIM OUTLINE

CUSTOMER COPY

TOLERANCE UNLESS OTHERWISE SPECIFIED		DRAWN BY HU YUGE	DATE 07-27-11
DECIMALS	mm	CHECKED BY HU YUGE	DATE 07-27-11
X	± 0.5		
X.X	± 0.3	APPROVED BY MA LIN	DATE 07-27-11
X.XX	± 0.1		
ANGLES	± 0.5°	U/M mm	

THIS DRAWING WAS PRODUCED BY COMPUTER, DO NOT SCALE DRAWING OR UPDATE MANUALLY.

EMERSON. Network Power — Connectivity Solutions

TITLE
FRONT MT BKHD JACK W/TAB

SHEET	DRAWING NO.	SIZE
1 OF 1	CP1094AST -CUST	A