MICRO SWITCH
FREEPORT ILLINOIS
A DIVISION OF HONEYWELL
FED. MFG. CODE 91929

SWITCH-BASIC

CATALOG LISTING
BA-2RB-A4

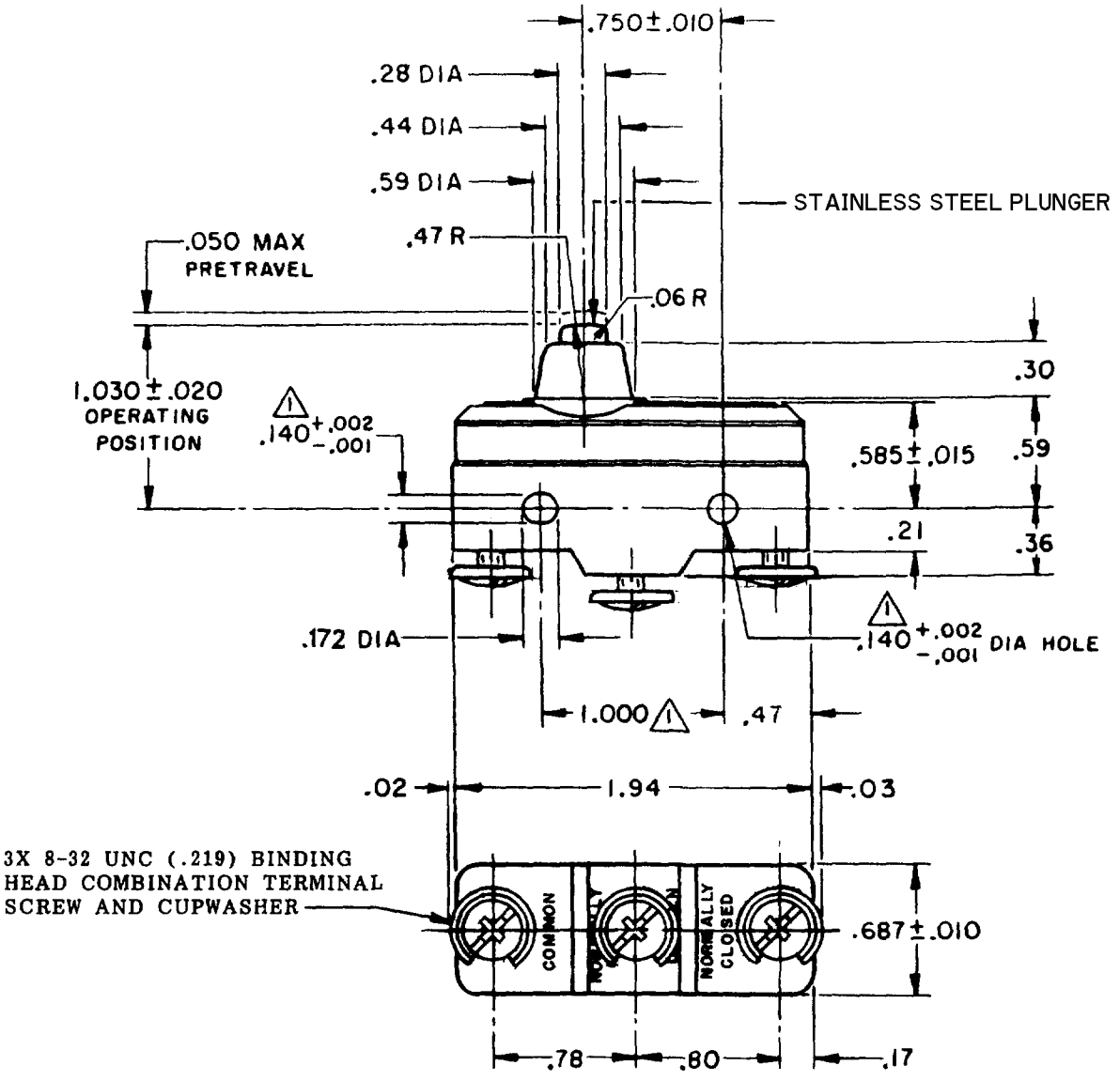

NOTE
1. MOUNTING HOLES WILL ACCEPT PINS OR SCREWS OF .139 MAX DIA ON 1.000±.002 CENTERS

THIS DRAWING COVERS A PROPRIETARY ITEM AND IS THE PROPERTY OF MICRO SWITCH, A DIVISION OF MINNEAPOLIS-HONEYWELL REGULATOR CO. THIS DRAWING IS NOT TO BE COPIED OR USED WITHOUT THE APPROVAL OF MICRO SWITCH.

CHARACTERISTICS

OPERATING FORCE — — — — 14 — 22 OZ

RELEASE FORCE — — — — 10 OZ MIN

DIFFERENTIAL TRAVEL — —.0020—.0075

OVERTRAVEL — — — — — .094 MIN

ELECTRICAL DATA

CONTACT ARRANGEMENT
S P D T

L23
UNDERWRITERS' LAB. INC. LISTED RATING
20A - 125, 250 OR 480 VAC
10A - 125 VAC "L"
1HP - 125 VAC, 2HP - 250 VAC
1/2A - 125 VDC, 1/4A - 250 VDC

L288
L299
L308
20(3)A 250V ~ T85 5E4

SCALE FULL
DO NOT SCALE PRINT

UNLESS OTHERWISE SPECIFIED
DIMENSIONS ARE IN INCHES
TOLERANCES ARE:

ONE PLACE	(.0)	±.030
TWO PLACE	(.00)	±.015
THREE PLACE	(.000)	±.005
ANGLES		±

WEIGHT .064 LB

CATALOG LISTING
BA-2RB-A4
PAGE 1 OF 1
M
DRAWING NUMBER
ISSUE 6
RELEASE NO. SR 10799
REPLACES

REVISIONS
A C034310 K P K 20 DEC 74
B CO-73287-G J A L 20 OCT 93
C CO-77588 K D R 29 MAR 94
D C093346 D L T 22 AUG 98
E CO-95750-B C S L 29 MAR 00

DRAWN M B F 13 FEB 63
CHECK D A W 14 Feb '63
CHECK D R J 14 Feb '63
CHECK

FORMTEK
FO-50378