REVISIONS						
REV	ZONE	ECO	DESCRIPTION	DATE	BY	APPR
A1	--	--	RELEASE NUMBER	02/07/12	--	--

安费诺精密连接器(深圳)有限公司
Amphenol PCD Shenzhen
受 控 文 件
2012 年 06 月 01 日

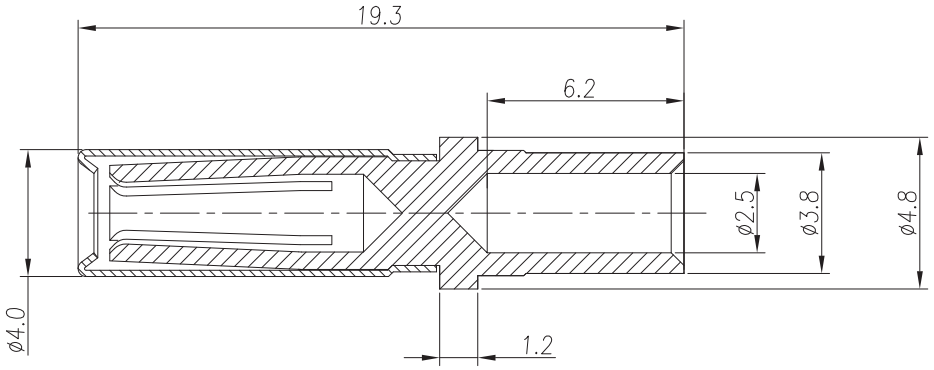

注(NOTES):
1. 材料 Material.
   铜合金 copper alloy
2. 表面处理Plating
   镀镍 Plating is nickel.
3. 性能参数 Specification:
   3.1额定电流Rating current:23A
   3.2接触电阻Contact resistance:5mΩ
4. 可互配的线缆范围Available wire range:12~14AWG

ITEM	PART NUMBER	Qty	DESCRIPTION	REMARK

MATERIALS LIST

UNLESS OTHERWISE SPECIFIED
1) All dimensions are in metric(mm).
2) Tolerances are as follows:
1 PL DEC ±0.30
2 PL DEC ±0.15 Fractions ±1/64
3 PL DEC ±0.08 Angles ±1°

MATERIAL SPECIFICATIONS:

PROCESS SPECIFICATIONS:

签 名 SIGNATURE		日期 DATE
制 图 DRAWN	ORION LI	02/07/12
审 核 CHECKED	FIRM XING	02/10/12
工 艺 ENGINEER		
批 准 APPROVAL	linda	2012.05.29 14:11:52 +08'00'
客 户 CUSTOMER		

THIS DRAWING IS SUPPLIED FOR INFORMATION ONLY. DESIGN FEATURES, SPECIFICATIONS AND PERFORMANCE DATA SHOWN HEREON ARE THE PROPERTY OF THE AMPHENOL CORPORATION. NO RIGHTS OF REPRODUCTION ARE IMPLIED. ALL DIMENSIONS ARE SUBJECT TO NORMAL MANUFACTURING VARIATIONS.

SINE Systems Corporation
A Subsidiary of Amphenol Corporation

SCOKET CONTACT 12# ,NICKLE

DWG NO: AT62-203-12141

第三角投影 THIRD ANGLE PROJECTION	文件编号 FSCM NO.	幅 面 SIZE	质 量 MASS	版次 REV.	比 例 SCALE
		A3		A1	X:X

SHEET 1 OF 1 NEXT ASS'Y: