THIS DRAWING IS UNPUBLISHED. RELEASED FOR PUBLICATION 20
© COPYRIGHT 20 BY - ALL RIGHTS RESERVED.

LOC	DIST
ES	00

REVISIONS

P	LTR	DESCRIPTION	DATE	DWN	APVD
	A1	REVISED PER ECR-13-020010	30DEC2013	KH	GJ

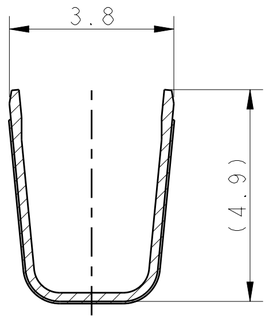

SECTION C-C

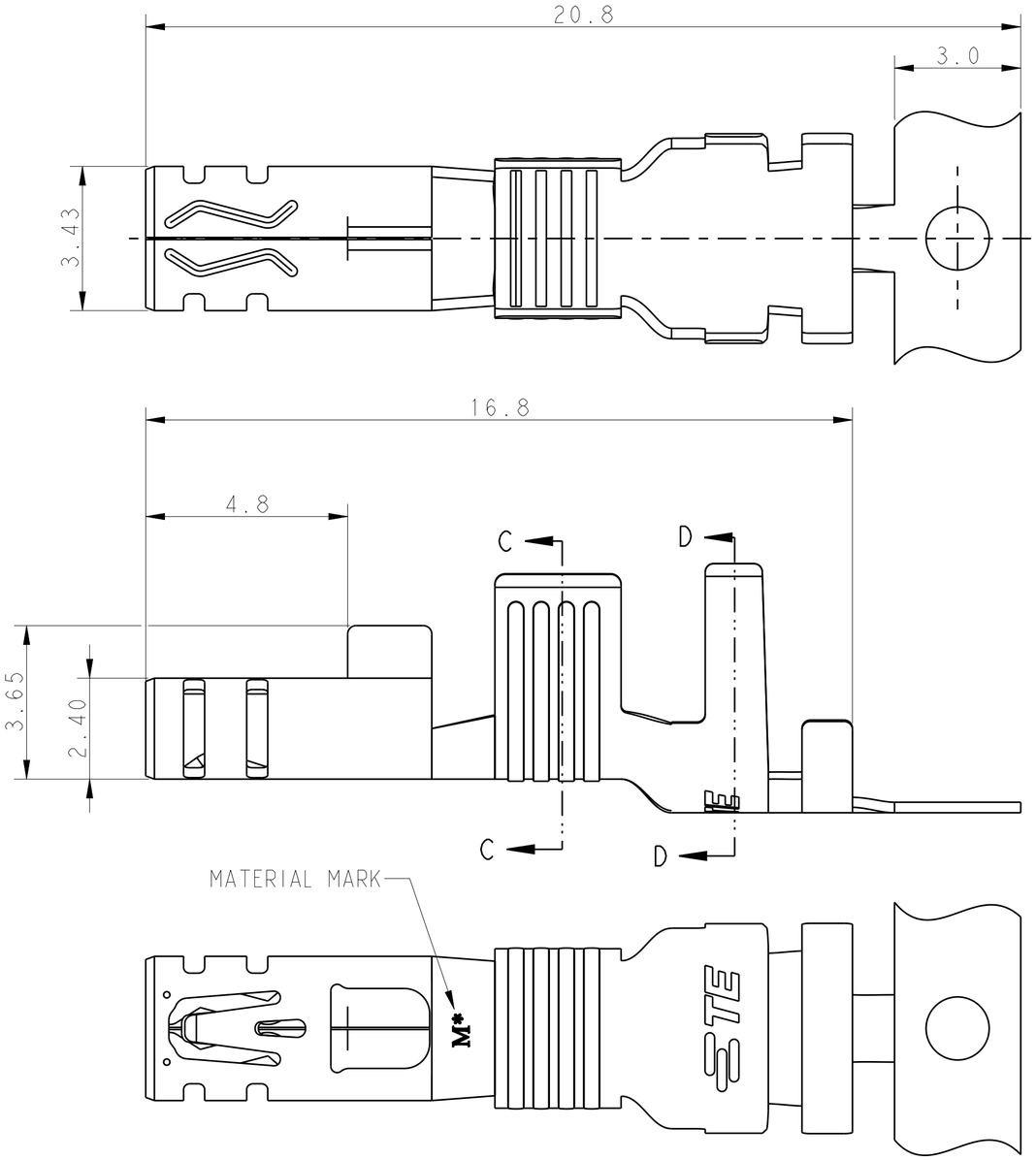

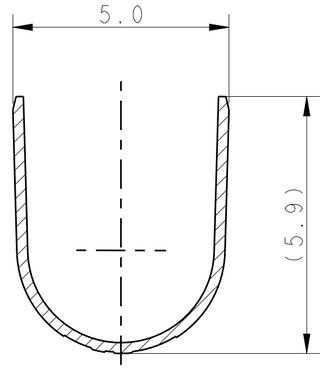

SECTION D-D

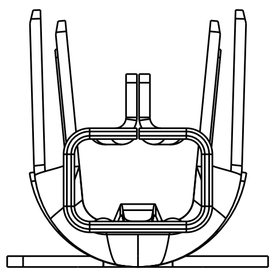

NOTE:

1. MATERIAL:COPPER ALLOY,PRE TIN PLATING
2. PRODUCT SPEC:108-106118
3. APPLICATION SPEC:114-106118
4. APPLICABLE MATED PLUG HOUSING P/N:
   -1971773-/*-1971776-*/*-1971876-*
   /*-2232265-*/*-2232266-*/*-2232357-*
5. APPLICABLE WIRE: 12AWG COPPER
6. APPLICABLE INSULATION DIAMETER: 3.85~4.25mm

1. This product has not completed validation testing.

HIGH(150°C)	M0	1971779-2
STANDARD(105°C)	M4	1971779-1
TEMP. RATING	MATERIAL MARK	PART NO

THIS DRAWING IS A CONTROLLED DOCUMENT.

DIMENSIONS: mm

TOLERANCES UNLESS OTHERWISE SPECIFIED:
0 PLC ±
1 PLC ±0.5
2 PLC ±0.30
3 PLC ±
4 PLC ±
ANGLES ±:

MATERIAL -
FINISH -

DWN TOMMY WU 11JUL2012
CHK HAPYE WU 11JUL2012
APVD YUHONG MAO 11JUL2012
PRODUCT SPEC 108-106118
APPLICATION SPEC 114-106118
WEIGHT -

TE Connectivity

NAME RECEPTACLE CONTACT POWER TRIPLE LOCK -

SIZE	CAGE CODE	DRAWING NO	RESTRICTED TO
A2	00779	C-1971779	-

Customer Drawing | SCALE - | SHEET 1 OF 1 | REV A1