**MICRO SWITCH**
FREEPORT, ILLINOIS, U.S.A.
A DIVISION OF HONEYWELL
FED. MFG. CODE 91929

# SWITCH—BASIC

CATALOG LISTING
**BA-1RV111-A2**
**ABN1150**

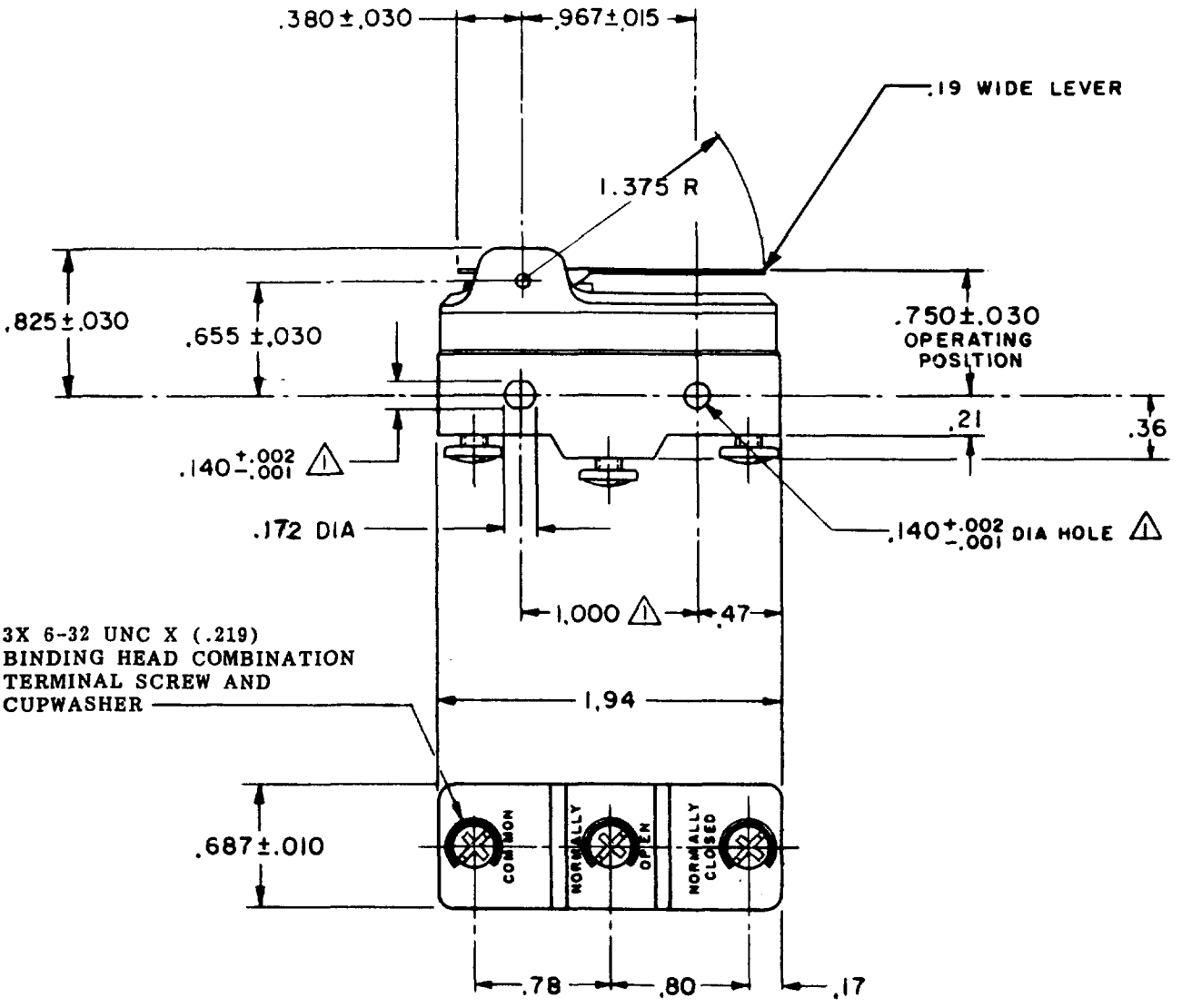


NOTE
1 – MOUNTING HOLES WILL ACCEPT PINS OR SCREWS OF .139 MAX DIA ON 1.000±.002 CENTERS

THIS DRAWING COVERS A PROPRIETARY ITEM AND IS THE PROPERTY OF MICRO SWITCH, A DIVISION OF MINNEAPOLIS-HONEYWELL REGULATOR CO. THIS DRAWING IS NOT TO BE COPIED OR USED WITHOUT THE APPROVAL OF MICRO SWITCH.

## CHARACTERISTICS

| | |
|---|---|
| OPERATING FORCE | 3.5 OZ MAX |
| RELEASE FORCE | 1 OZ MIN |
| PRETRAVEL | .290 MAX |
| A DIFFERENTIAL TRAVEL | .024 MAX |
| OVERTRAVEL | .062 MIN |

## ELECTRICAL DATA

CONTACT ARRANGEMENT
S P D T

-L33- 20 A-125, 250, OR 480 VAC
1 HP-125 VAC; 2 HP-250 VAC
0.5 A-125 VDC; 0.15 A-250 VDC

-L288-

-L308-
-L315- 20(3)A 250V ~ T85 5E4

SCALE FULL
DO NOT SCALE PRINT

UNLESS OTHERWISE NOTED
DIMENSIONS ARE IN INCHES
TOLERANCES ARE:

| | | |
|---|---|---|
| ONE PLACE | (.0) | ±.030 |
| TWO PLACE | (.00) | ±.015 |
| THREE PLACE | (.000) | ±.005 |
| ANGLES | | ± |

WEIGHT

BA-1RV111-A2
PAGE 1 OF 1
DRAWING NUMBER
RELEASE NO. SR 11020
REPLACES
17 FEB 06
ISSUE 7
RJ
CHECK
15 MAY 63
BRJ
CHECK
15 MAY 63
DAW
CHECK
14 MAY 63
DRAWN MBF

REVISIONS

| | | |
|---|---|---|
| A | CO 18321 | MBF 19 NOV 63 |
| B | CO 19384 | HBW 21 JUL 64 |
| C | CO-73287-J | JAL 22 NOV 93 |
| D | CO 77590 | SAD 8 JUN 94 |
| E | C093346 | DLT 27 AUG 98 |
| F | 0018388 | TGP 17 FEB 06 |

FORMTEK
FO-50378