COMMENT:
ALL RIGHTS ARE RESERVED BY US FOR THIS DRAWING. WITHOUT OUR PRIOR CONSENT,
IT MAY NEITHER BE DUBLICATED NOR MADE AVAILABLE TO A THIRD PARTY,
AND IT ALSO MAY NOT BE IMPROPERLY USED BY TE RECEIVER, OR A THIRD PARTY.

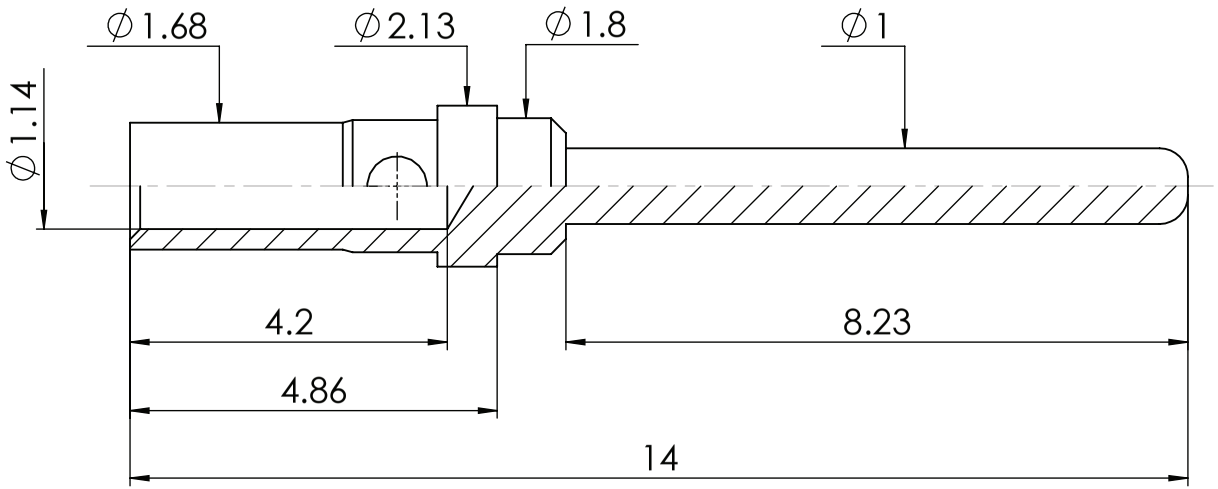

②	FK20PL-13V/CU	Brass (non magnetic)	1,3µm Au over Cu
	FK20P-13V/CU	Brass (non magnetic)	1,3µm Au over Cu
	FK20P-13V	Brass	1,3µm Au over Ni
	FK20PL-08V	Brass	0,8µm Au over Ni
	FK20PL-02V	Brass	0,2µm Au over Ni
③	FK20PL-01V	Brass	0,1µm Au over Ni
	Part No.	*Material*	*Surface plating/Colour/Class*

			Measurement without tolerance occ. to ISO 2768-m	SCALE 10:1	TITLE Crimp Pin Contact AWG 20-24
			NAME / DATE		
			DRAWN Denzinger 10-09-2002		
			CHECKED MTeubel 02-05-2013		
3	29-04-2013	23453	FCT group fctgroup.com	DWG.NO. FK20PL_D	REV. 3
2	16-04-2010	22576			
1					
REV.	DATE	CH.-NO.	ORIGINAL: DIN A4-DRAWING AS A FILE	REPLACEMENT FOR: DK20PL a / FK20P_D a	PAGES 1