ITEM NO	MATERIAL	COLOUR
44441-2006	UL94V-0 NYLON	BLACK
44441-3006	UL94V-2 NYLON IEC 60335-1 GLOW WIRE CAPABLE	BLACK

NOTES:

1. MATERIAL: SEE CHART
2. THIS CONNECTOR HOUSING FOR USE WITH 43375-**** TERMINALS.
3. THIS CONNECTOR HOUSING WILL MATE TO A-43160-****6, 43180-***6, AND 43680-***6 HOUSINGS.
4. PRODUCT SPECIFICATION: PS-44441-9999.
5. PACKAGING: PK-44441-001.
6. PART CONFORMS TO CLASS 'B' REQUIREMENTS OF COSMETIC SPECIFICATION PS-45499-002 BUT, MEETS CLASS 'C' REQUIREMENTS FOR BUBBLES, SINK AND DISCOLORATION.

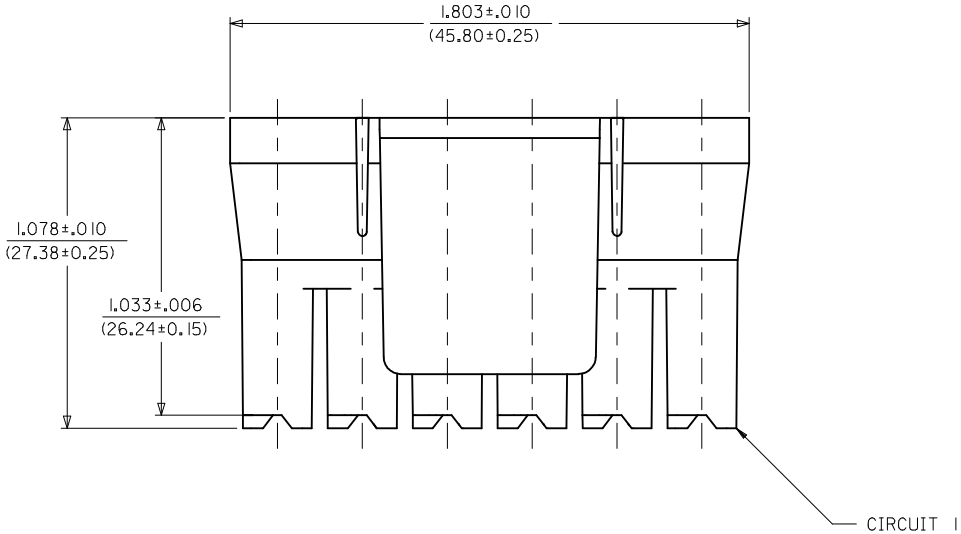

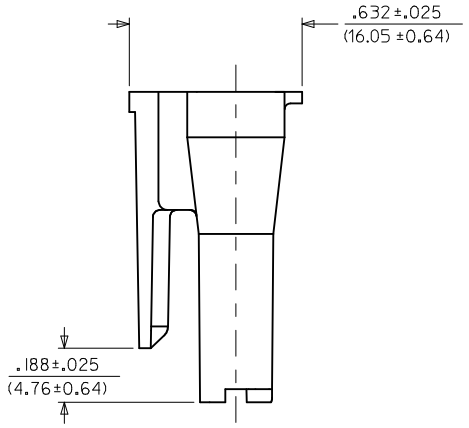

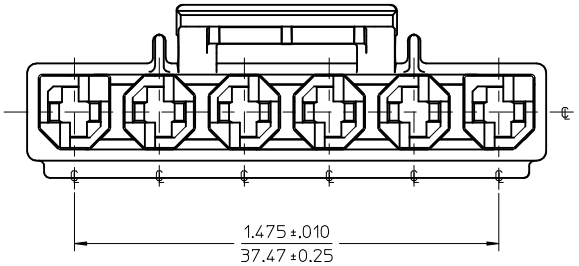

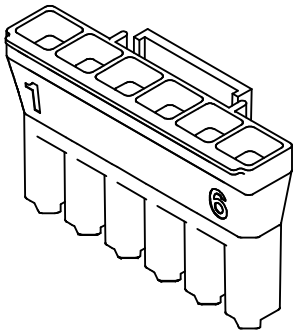

CORRECT TOLERANCE
EC NO: UCP2014-5424
DRWN: JDFOX 2014/06/26
CHKD: BANDERSON 2014/06/26
APPR: FSMITH 2014/07/09
D1

DESCRIPTION

REV

QUALITY SYMBOLS
=0
=0
=0

GENERAL TOLERANCES (UNLESS SPECIFIED)

	mm	INCH
4 PLACES	± ---	± ---
3 PLACES	± ---	± .010
2 PLACES	± 0.25	± .014
1 PLACE	± 0.35	± ---
0 PLACE	±	±

ANGULAR ±1/2°

DRAFT WHERE APPLICABLE MUST REMAIN WITHIN DIMENSIONS

DIMENSION STYLE: IN/MM
SCALE: 3:1
DESIGN UNITS: INCH
THIRD ANGLE PROJECTION

DRAWN BY: GC DATE: 1995/01/09
CHECKED BY: KBP DATE: 1995/01/09
APPROVED BY: DATE

TITLE: 6-CIR. RECEPT. HOUSING .125/(3.18)X.020/(0.51) SABRE - TPA

molex

MATERIAL NO.: SEE CHART
DOCUMENT NO.: SD-44441-2006
SHEET NO.: 1 OF 1
SIZE: C

THIS DRAWING CONTAINS INFORMATION THAT IS PROPRIETARY TO MOLEX INCORPORATED AND SHOULD NOT BE USED WITHOUT WRITTEN PERMISSION