THIS DRAWING IS UNPUBLISHED. RELEASED FOR PUBLICATION 2011
© COPYRIGHT 2011 Tyco Electronics AMP GmbH ALL RIGHTS RESERVED.

LOC	DIST
GT	-

REVISIONS

P	LTR	DESCRIPTION	DATE	DWN	APVD
	A4	NEW VARIANT ADDED	24AUG2004	BrM	BLM
	A5	NEW VARIANT ADDED	21SEP2011	PM	CV
	A6	Drawing review ECR-12-018815	29OCT2012	MP	VC
	A7	ECR-13-011943	26JUL2013	MP	PSt

1 VERSION WITH REDUCED MATING FORCE
Ausführung mit reduzierter Steckkraft

2 SUITABLE FOR TABS 8x1.2mm AND 9.5x1.2mm
Geeignet für Flachstecker 8x1.2mm und 9.5x1.2mm

3 FOR CRITIZATION OF THE GAP-SIZE,
THE MATING-FORCE HAS PRIORITY
(<40N WITH TEST TAB ACC. TO PRODUCT SPEC).
Zur Beurteilung des Öffnungsmaßes
ist die Steckkraft ausschlagebend
(<40N mit der Prüfung tab nach produktspezifikation).

4 1-3 µm TIN LAYER FOR HIGHER TEMPERATURE REQUIREMENTS.
1-3 µm Zinnschicht für höhere Temperaturanforderungen.

5 CONTACT ZONE SELECTIVE PRE-SILVER PLATED MIN. 3 µm; REST Ag FLASH
Kontaktzone selektiv voresilbert min. 3 µm; Rest Ag Blitz

VERSION A

(UNSEALED / ungedichtet)

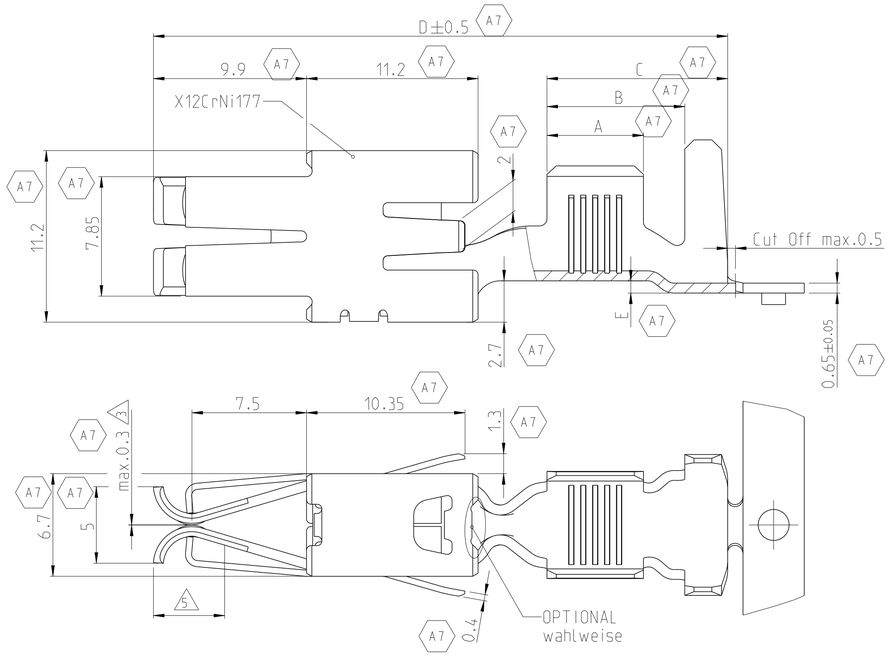

VERSION B

(SINGLE WIRE SEAL-SYSTEM / Einzel-Dichtungs-System)

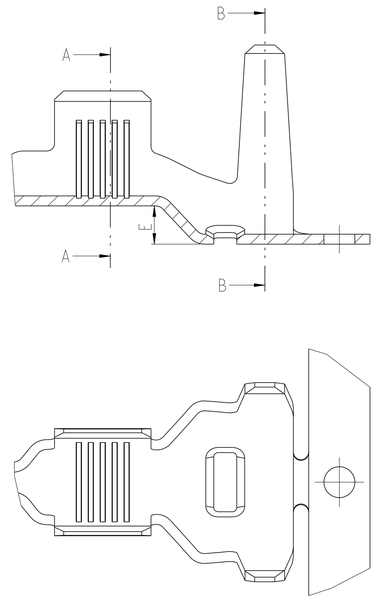

	SECTION A-A Schnitt A-A	SECTION B-B Schnitt B-B	WIRE-CRIMP Drahtcrimp	SECTION A-A Schnitt A-A	SECTION B-B Schnitt B-B
	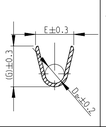	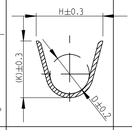	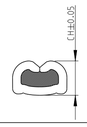	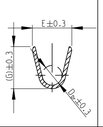	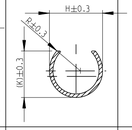

	PN STRIP FORM Bandware	REV.	PN LOOSE PIECE Einzelausführung	MATERIAL Werkstoff	SURFACE Oberfläche	DGB WIRE RANGE [mm²]	INSULATION DIAMETER [mm]	STRIP FORM WIRE CRIMP Drahtcrimp	STRIP FORM INSUL.-CRIMP Isol.-Crimp	WIRE CRIMP HEIGHT CH Drahtcrimp-Höhe CH	LOOSE PIECE WIRE CRIMP Drahtcrimp	LOOSE PIECE INSUL.-CRIMP Isol.-Crimp	APPLICATION TOOL Anschlag-WKZ	HAND TOOL Handzange	A	B	C	D	E +0.25 -0.15
								Bandware		CRIMP DIMENSION (mm) Crimpabmessungen (mm)	Einzelausführung		EXTRACTION TOOL Ausdrückwerkzeug No.: 1-1579007-7						
VERSION B	-	-	-	-	-	- -	- -	- - -	- - -	- - -	- - -	- - -	- -	-	-	-	-	-	-
	962938-1	F	962939-1	CuNiSi	vorverzinnt PRETINNED	6.0-10.0	6.0-6.6 FLK	E = 7.0 G = 7.5 D_a = 3.7	H = 13.0 K = 13.0 D = 9.5	10.0mm² = 3.82 - 6.0mm² = 3.20	E = 6.0 G = 7.7 D_a = 3.6	H = ∅ 11.8 K = 11.5 R = /	680699 MQC-Applicator 2-878660-2	-	6.3	11.9	15.6	41	2.5
	962936-1	F	962937-1	CuNiSi	vorverzinnt PRETINNED	4.0-6.0	4.7-5.2 FLK	E = 5.6 G = 5.9 D_a = 3.0	H = 13.0 K = 13.0 D = 9.5	6.0mm² = 3.08 4.0mm² = 2.74	E = 4.8 G = 6.0 D_a = 2.9	H = ∅ 11.8 K = 11.5 R = /	2151146 MQC-Applicator 2-878595-2	-	5.5	11.1	14.8	41	2.5
	962934-1	D	962935-1	CuNiSi	vorverzinnt PRETINNED	>2.5-4.0	4.0-4.5 FLK	E = 4.9 G = 5.1 D_a = 2.3	H = 13.0 K = 13.0 D = 9.5	4.0mm² = 2.71 -	E = 4.2 G = 5.3 D_a = 2.3	H = ∅ 11.8 K = 11.5 R = /	1855578 MQC-Applicator 2-878594-2	-	4.5	11.1	14.8	41	2.5
VERSION A	-	-	-	-	-	- -	- -	- - -	- - -	- - -	- - -	- - -	- -	-	-	-	-	-	-
	1-962932-6	A	1-962933-6	CuNiSi	4 vorverzinnt PRETINNED	6.0-10.0	4.7-6.6 FLK	E = 7.0 G = 7.5 D_a = 3.7	H = 9.2 K = 10.0 D = 5.9	10.0mm² = 3.82 8.5mm² = 3.59 6.5mm² = 3.28 6.0mm² = 3.20	E = 6.0 G = 7.7 D_a = 3.6	H = 7.8 K = 8.5 R = 4.2	2151285 MQC-Applicator 2-878659-2	734533-1 (only for 10mm²)	6.3	9.0	11.8	37.5	0.8
	962932-1	H	962933-1	CuNiSi															
	1-962930-6	A	1-962931-6	CuNiSi	4 vorverzinnt PRETINNED	4.0-6.0	4.0-5.2 FLK	E = 5.6 G = 5.9 D_a = 3.0	H = 7.8 K = 8.1 D = 4.5	6.0mm² = 3.08 5.5mm² = 3.00 5.0mm² = 2.91 4.0mm² = 2.74	E = 4.8 G = 6.0 D_a = 2.9	H = 6.9 K = 6.95 R = 3.8	2151284 MQC-Applicator 1855532	734532-1 (only for 6mm²)	5.5	7.8	10.1	37.5	0.6
	962930-1	H	962931-1	CuNiSi															
	962928-3	G	-	CuNiSi	5 vorverzinnt PRETINNED	>2.5-4.0	3.3-4.7 FLK	E = 4.9 G = 5.1 D_a = 2.3	H = 6.9 K = 7.2 D = 4.0	4.0mm² = 2.71 3.5mm² = 2.62 3.0mm² = 2.52 2.5mm² = 2.42	E = 4.2 G = 5.3 D_a = 2.3	H = 5.8 K = 6.35 R = 3.3	2151492 MQC-Applicator 2-878592-2	734531-1	4.5	6.8	9.1	37.5	0.6
	962928-1	G	962929-1	CuNiSi															

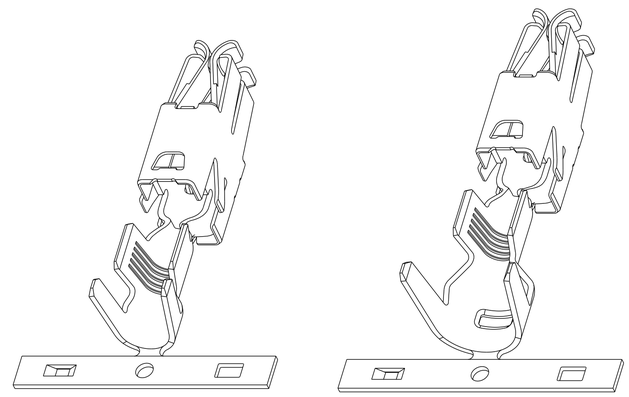

THIS DRAWING IS A CONTROLLED DOCUMENT.

DIMENSIONS: mm

TOLERANCES UNLESS OTHERWISE SPECIFIED: ±0.2mm; ISO 8015; ISO 2768-H -E; ±2°

MATERIAL: SEE TABLE

FINISH: SEE TABLE

DWN	M. Pfeilschifter	31JUL2000
CHK	V. Hunn	31JUL2000
APVD	M. Bleicher	31JUL2000
PRODUCT SPEC	108-18047	
APPLICATION SPEC	114-18075	
WEIGHT	-	

TE Connectivity

NAME: MAXI POWER TIMER FOR 1.2MM TABS
MAXI POWER TIMER für 1.2mm TABs

SIZE	CAGE CODE	DRAWING NO	RESTRICTED TO
A1	00779	C-1355050	-

CUSTOMER DRAWING | SCALE 5:1 | SHEET 1 OF 1 | REV A7