2014/06/10 17:35:43 SRoper

参考図：ご確認用。正式には別途納入仕様書をご請求願います。

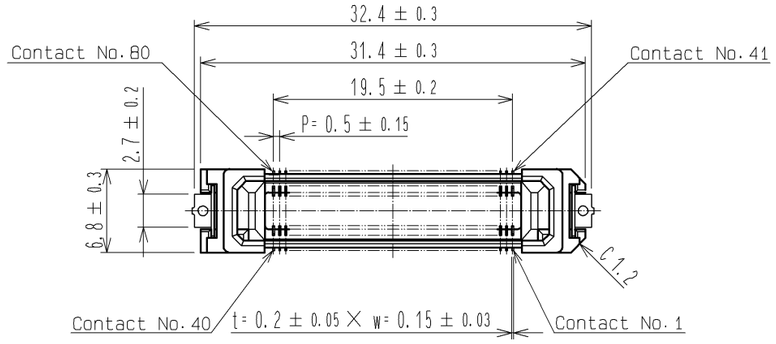

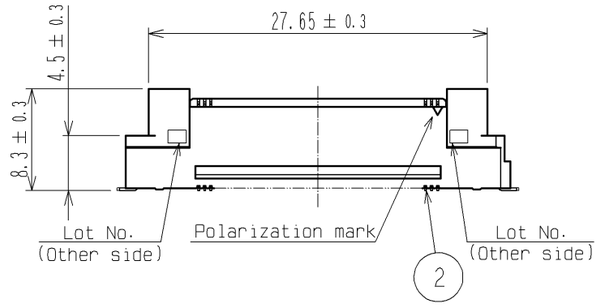

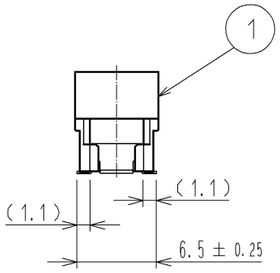

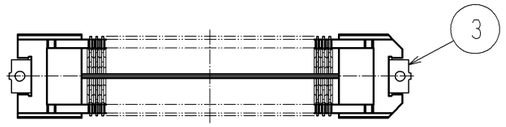

Recommended land pattern dimension of PCB

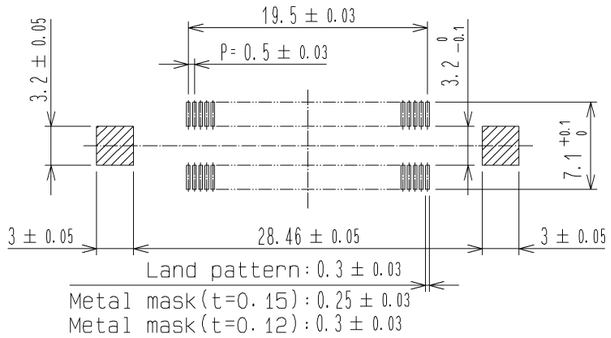

Drawing for mating (No scale)

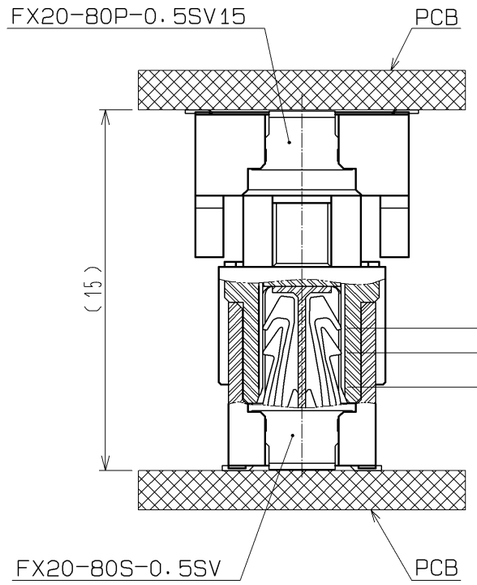

Drawing for mating (No scale)

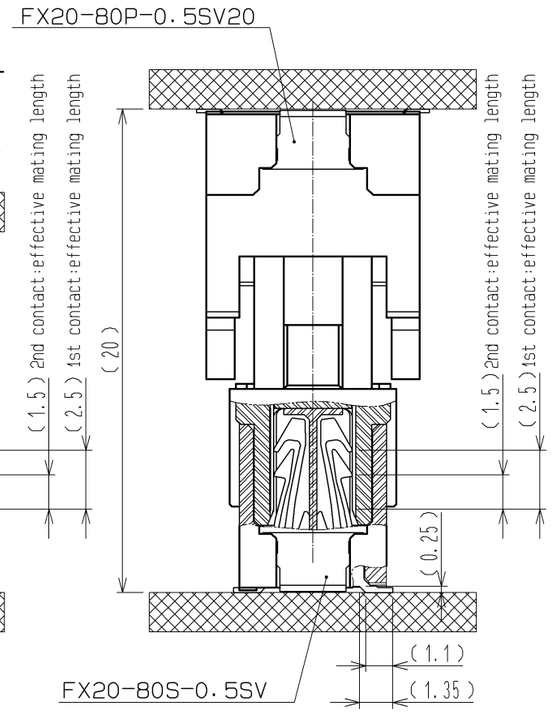

2 Drawing for packing (No scale)

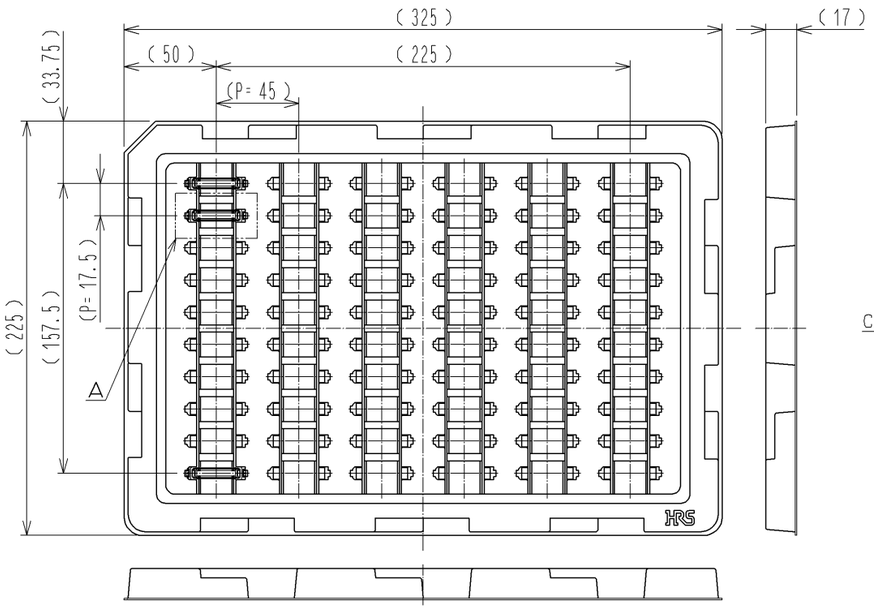

A (1 : 1)

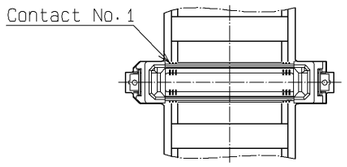

1 Lead CO-Planarity is 0.1mm MAX.
2 This is packaged in tray. (60pcs/tray)
3 Blemish and hit mark can be occured through out the manufacturing process which doesn't affect quality level.
4 Please note that excessive wrenching force could damage this connector.
Please refer to the guideline for detailed regulations of the mating method.
5 The dimensions in parentheses are for references.

NO.	MATERIAL	FINISH , REMARKS
1	LCP	BLACK UL94V-0

NO.	MATERIAL	FINISH , REMARKS
3	BRASS	TIN-PLATING 1μm
2	PHOSPHOR BRONZE	CONTACT AREA:GOLD 0.1μm
		LEAD AREA:GOLD 0.03μm
		UNDER PLATING:NICKEL 1μm

UNITS	SCALE	COUNT	DESCRIPTION OF REVISIONS	DESIGNED	CHECKED	DATE
mm	2 : 1					

HRS HIROSE ELECTRIC CO., LTD.

APPROVED	: HS. OKAWA	13.10.07	DRAWING NO.	EDC3-336340-00
CHECKED	: KI. HIROKAWA	13.10.07	PART NO.	FX20-80S-0.5SV
DESIGNED	: TS. OONO	13.10.07	CODE NO.	CL570-1103-0-00
DRAWN	: TS. OONO	13.10.07		1/1

FORM HC0011-5-7