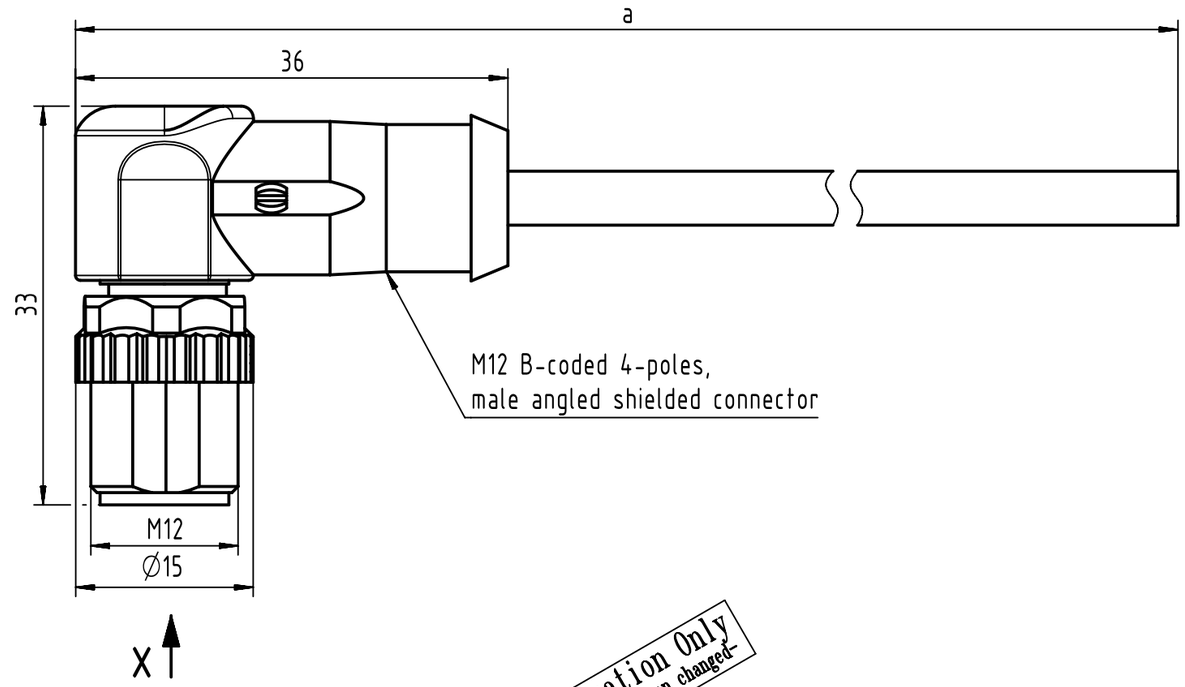

For Information Only
-won't be replaced when changed-

Loading-Plan:

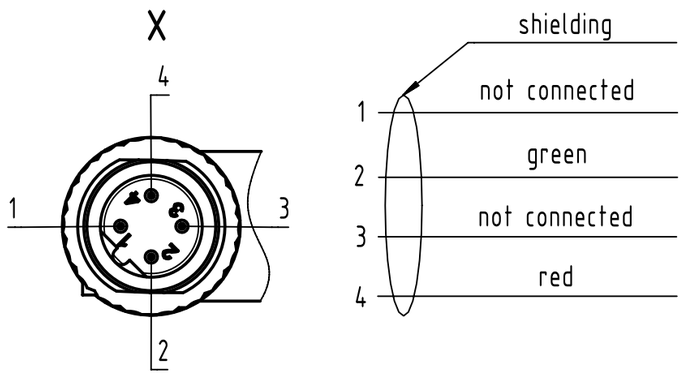

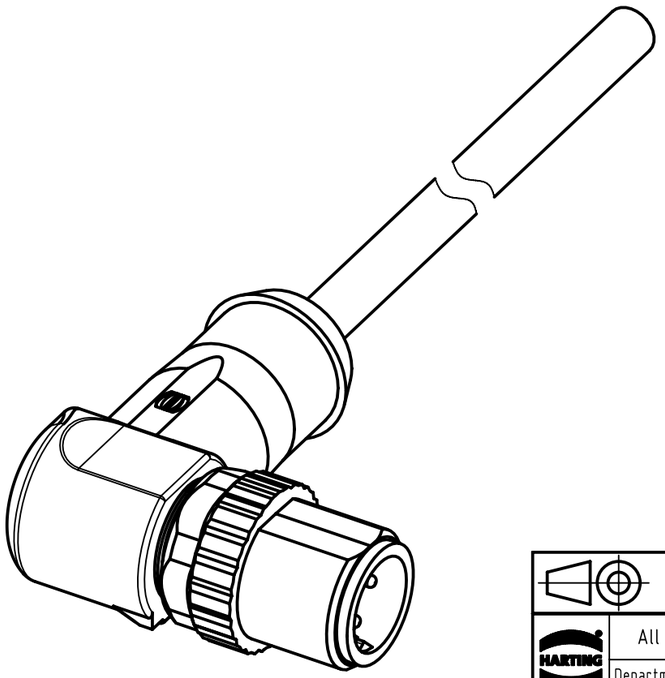

- Protection level: IP67
- Temperature range: -30°C ... +80°C

length in "1m" step	40	XXX=400
	39	XXX=390
	. . .	. . .
	12	XXX=120
	11	XXX=110
length in "0.1m" step	10	XXX=100
	9.9	XXX=099
	9.8	XXX=098
	. . .	. . .
	0.4	XXX=004
	0.3	XXX=003
	0.2	XXX=002
	0.1	XXX=001
Step	a [m]	XXX

a [m]	Tolerance
4.0 to 40	+1%
0.1 to 3.9	+0.04

Part no.	213490004XXXXX

Type of cable	XX
PVC violet, 2xAWG22	XX=86

All Dimensions in mm
Original Size DIN A3

Scale 2:1 | Free size tol. | Ref. | Sub.

All rights reserved

Department EC PD - RO

HARTING Electronics GmbH
D-32339 Espelkamp

Created by	Inspected by	Standardisation	Date	State
TOMUTA			2014-06-12	Checked Out

Title: M12 B-coded Cable Assembly

Doc-Key / ECM-Nr.: 100580632/UGD/009/A

Type: TB | Number: 213490004XXXXX | Rev.: A | Page: 1/1

A3