PRODUCT NO.	FINISH : Solder Tail
~~10033998-001~~	~~Pure-Sn 1.27μm MIN.~~
~~10033998-002~~	~~Au FLASH~~
10033998-002LF	Au FLASH

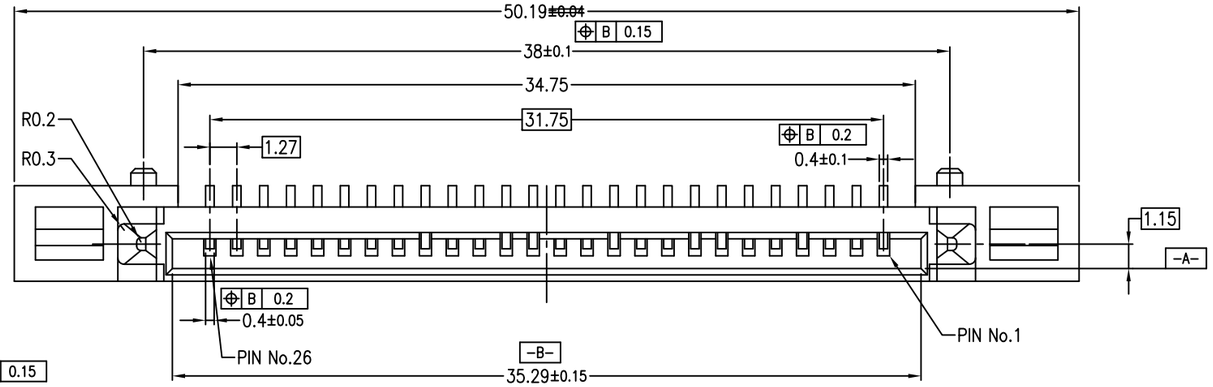

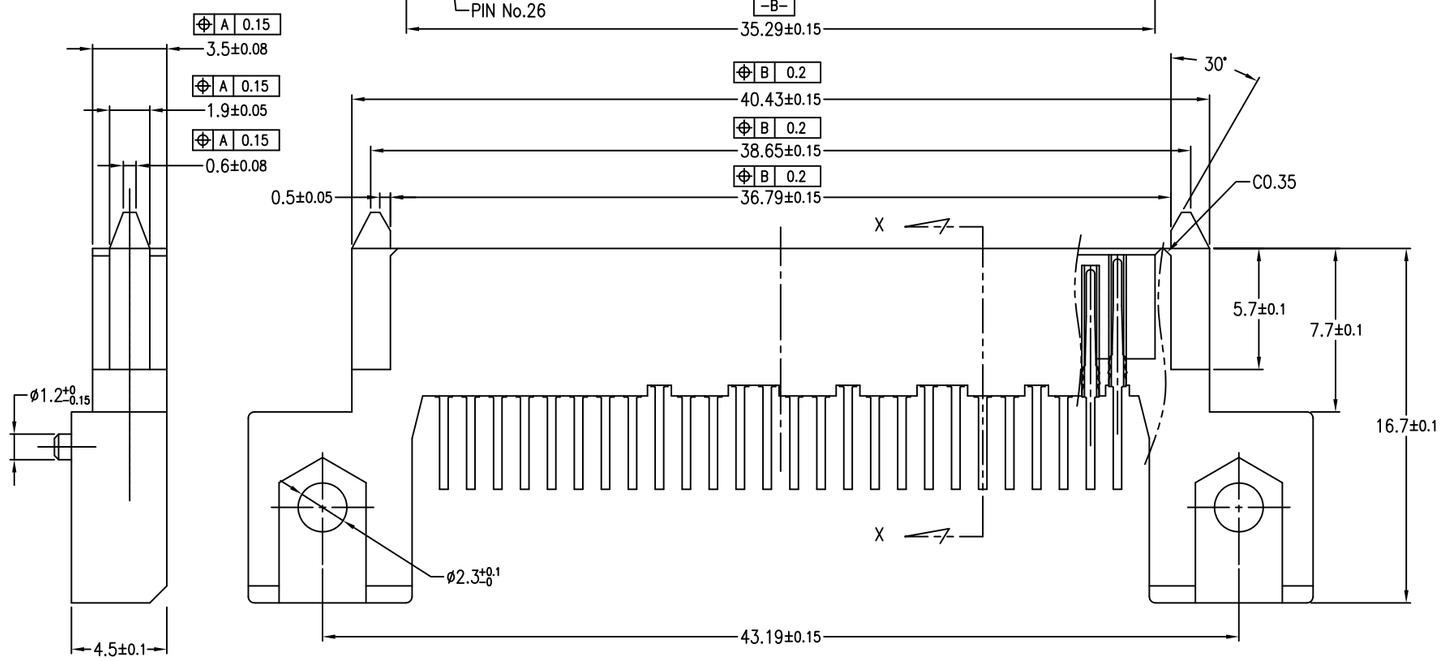

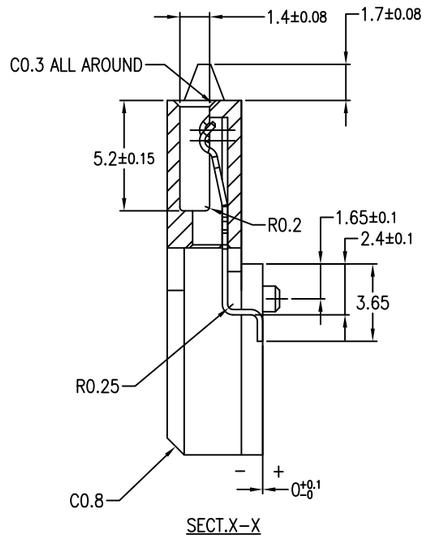

SECT.X-X

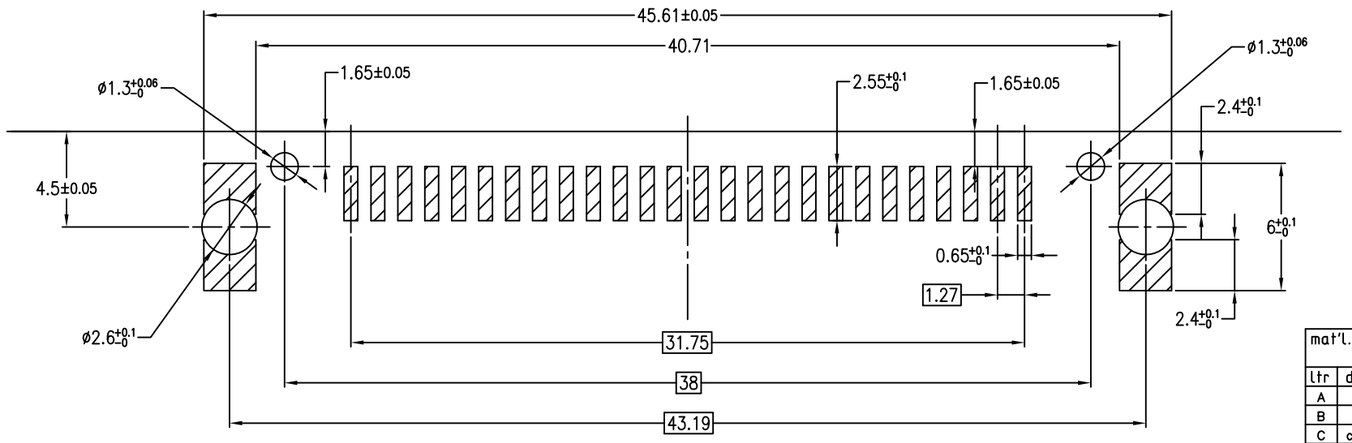

NOTE
1.THIS PRODUCT MEETS THE iVDR-HWSPEC (2.5-inch, 1.8-inch Serial type)
2.MATERIAL
1) HOUSING : HIGH TEMPERATURE THERMOPLASTIC,BLACK, UL94V-0
2) TERMINAL : COPPER ALLOY
3.FINISH
1) TERMINAL : ALL OVER Ni 1.27μm MIN.
CONTACT POINT Au PLATING 0.3μm MIN.
SOLDER TAIL SEE TABLE
4.RoHS
THIS PRODUCT MEETS EUROPEAN UNION DIRECTIVES AND OTHER COUNTRY REGULATIONSAS DESCRIBED IN GS-22-008

RECOMMENDED MOUNTING LAYOUT
TOLERANCE UNLESS OTHERWISE:±0.1

ltr	description	ecn no	dr	date
A	RELEASED	J04-0286	Y.K	8/23/'04
B	REVISED	J05-0107	Y.K	2/24/'05
C	Change DWG form	J07-0041	Y.K	1/23/'07
D	Change of P/N	J07-0464	Y.K	2007-9-13
E	Change of P/N	J08-0253	Y.K	2008-6-12
F	Add sheet2	J09-0416	Y.K	2008-6-12
G	Change of sheet2	ELX-J-17683	Y.K	2014-05-16

sheet index	revision	G	G
	sheet	1	2

mat'l. code ---
surface ISO 1302
tolerance ISO 406 ISO 1101
tolerances unless otherwise specified
angles 0°±2°
linear 0.X ±0.3 / 0.XX ±0.3 / 0.XXX ±0.3
projection
MM
scale 5:1

dr	Y.KAMEDA	2014-05-16
engr	Y.KAMEDA	2014-05-16
chr	M.MINATO	2014-05-16
appd	N.SASAME	2014-05-16

product family 53MF
CODE JP
title ASSEMBLY S-iVDR COMB RECE. SMT R/A TYPE
dwg no 10033998
sheet 1 of 2
size A2
type Product Customer Drawing
Rev. G

form: A2

FCIconnect.com
Copyright FCI.

PRODUCT NO.
10033998-002STLF

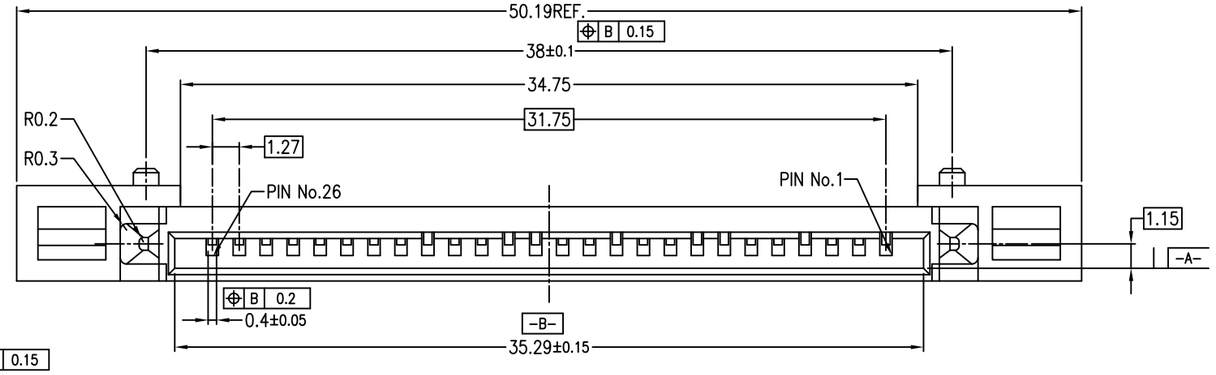

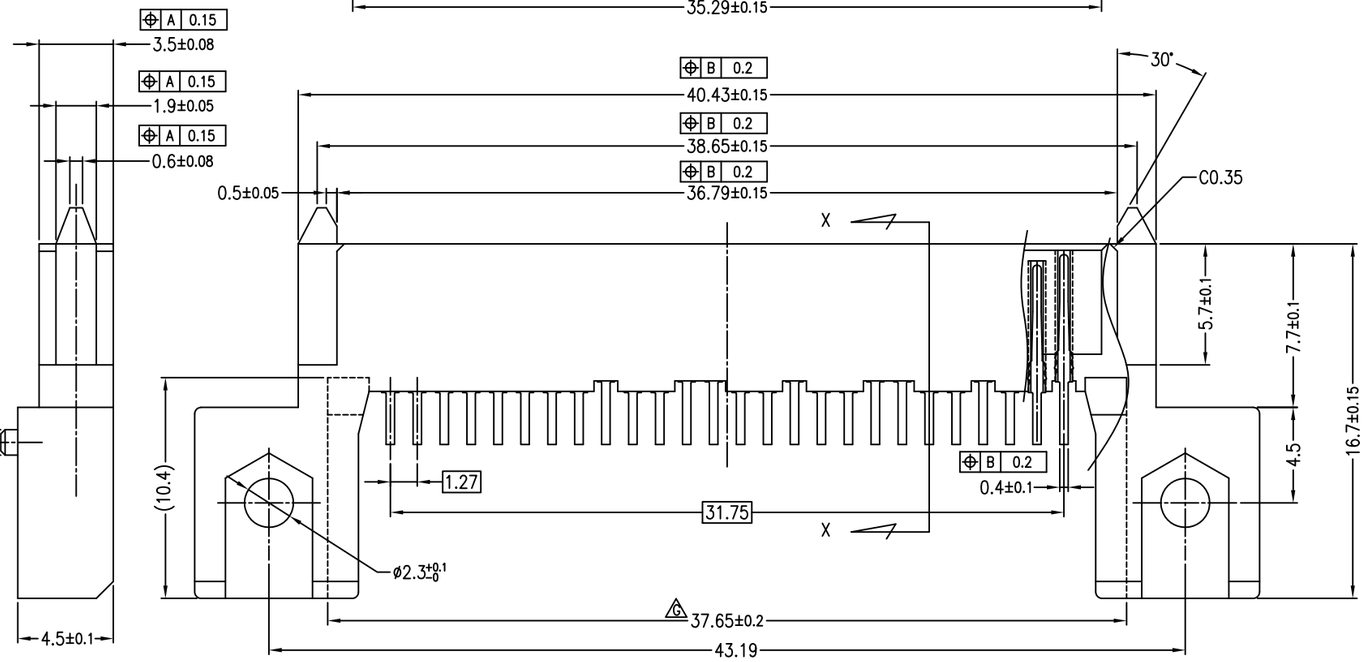

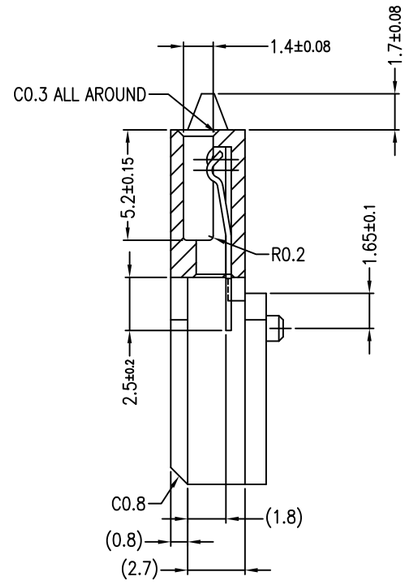

SECT.X-X

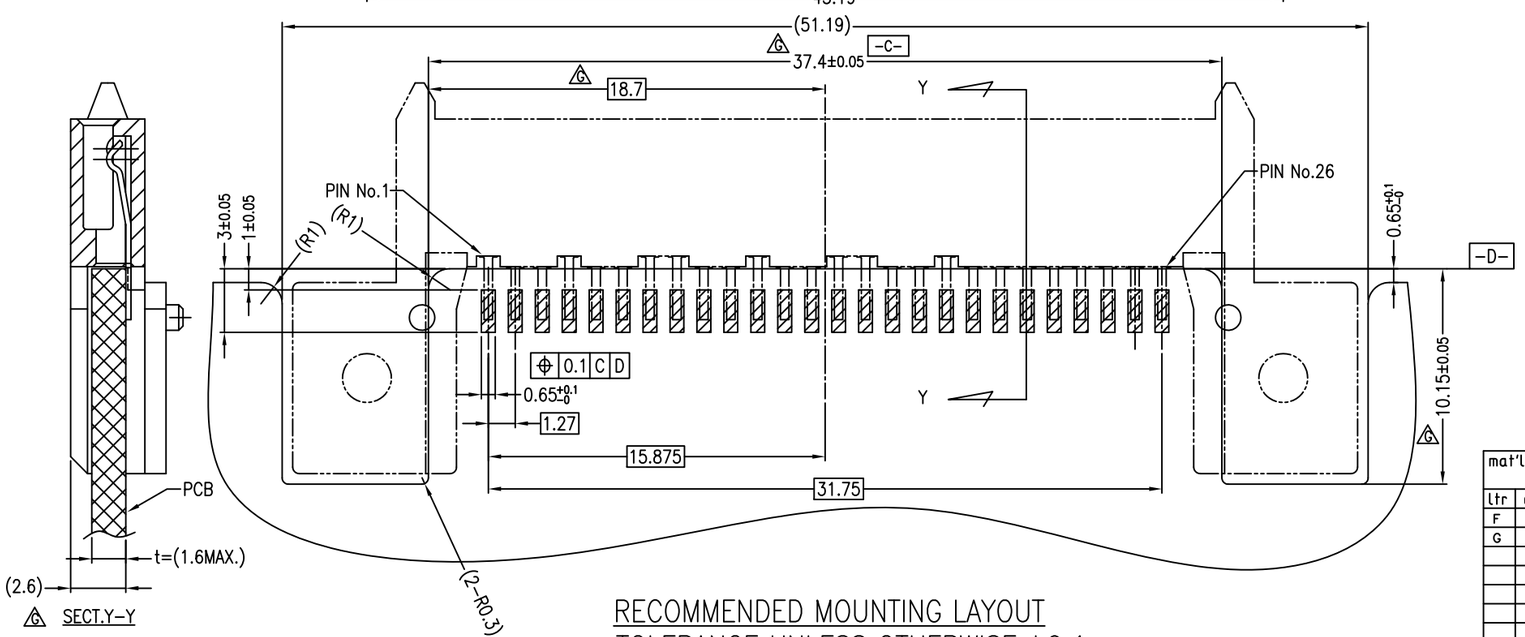

SECT.Y-Y

NOTE
1.THIS PRODUCT MEETS THE iVDR-HWSPEC (2.5-inch, 1.8-inch Serial type)
2.MATERIAL
1) HOUSING : HIGH TEMPERATURE THERMOPLASTIC,BLACK, UL94V-0
2) TERMINAL : COPPER ALLOY
3.FINISH
1) TERMINAL : ALL OVER Ni 1.27μm MIN.
CONTACT POINT Au PLATING 0.3μm MIN.
SOLDER TAIL Au Flash
4.RoHS
THIS PRODUCT MEETS EUROPEAN UNION DIRECTIVES AND OTHER COUNTRY REGULATIONSAS DESCRIBED IN GS-22-008

RECOMMENDED MOUNTING LAYOUT
TOLERANCE UNLESS OTHERWISE:±0.1

ltr	description	ecn no	dr	date
F	RELEASED	J09-0416	Y.K	2009-11-26
G	REVISED	ELX-J-17683	Y.K	2014-05-16

mat'l. code	---		
surface	ISO 1302	tolerance	ISO 406, ISO 1101
tolerances unless otherwise specified	angles	0°±2°	linear: 0.X ±0.3; 0.XX ±0.3; 0.XXX ±0.3
projection	MM	scale	5:1
dr	Y.KAMEDA	2009-11-26	
engr	Y.KAMEDA	2009-11-26	
chr			
appd			
product family	53MF	CODE	JP
title	ASSEMBLY S-iVDR COMB RECE. SMT R/A TYPE		
dwg no	10033998	sheet 2 of 2	size A2
type	Product Customer Drawing		
sheet index	revision sheet		Rev. G

FCIconnect.com
Copyright FCI.