pro-SIGNAL

PART NO.

PSG01309

REVISIONS								
ECN #	REV	DESCRIPTION	DRAWN	DATE	CHECKD	DATE	APPRVD	DATE
-	1.0	RELEASED	AB	01/06/15	ER	01/06/15	ER	01/06/15

RoHS Compliant

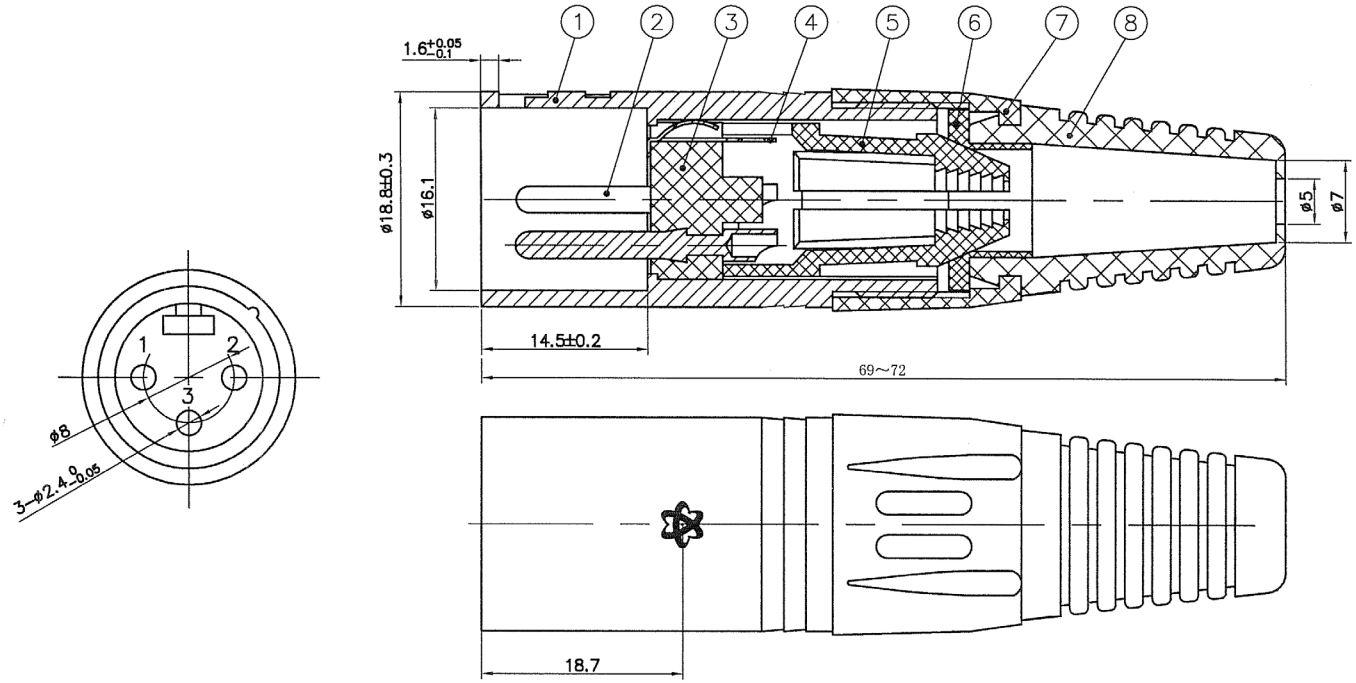

Dimensions : Millimetres

No.	Description	Material	Finish	QTY.
1.	Die-Cast Shell	ZZnA14-1	Nickel / Black	1/1
2.	Pin	H59-1	Silver	3
3.	Insulator	PA	-	1
4.	Terminal	H62	Tin	
5.	Chuck	POM	-	
6.	T-Ring	POM	-	
7.	Cap	PA	-	
8.	Boot	PVC	-	

Part Number Table

Description	Part Number
Plug, XLR, Free, Black, 3Pole	PSG01309

www.element14.com
www.farnell.com
www.newark.com
www.cpc.co.uk

Important Notice : This data sheet and its contents (the "Information") belong to the members of the Premier Farnell group of companies (the "Group") or are licensed to it. No licence is granted for the use of it other than for information purposes in connection with the products to which it relates. No licence of any intellectual property rights is granted. The Information is subject to change without notice and replaces all data sheets previously supplied. The Information supplied is believed to be accurate but the Group assumes no responsibility for its accuracy or completeness, any error in or omission from it or for any use made of it. Users of this data sheet should check for themselves the Information and the suitability of the products for their purpose and not make any assumptions based on information included or omitted. Liability for loss or damage resulting from any reliance on the Information or use of it (including liability resulting from negligence or where the Group was aware of the possibility of such loss or damage arising) is excluded. This will not operate to limit or restrict the Group's liability for death or personal injury resulting from its negligence. pro-SIGNAL is the registered trademark of the Group. © Premier Farnell plc 2012.

TOLERANCES:

UNLESS OTHERWISE SPECIFIED, DIMENSIONS ARE FOR REFERENCE PURPOSES ONLY.

DRAWN BY:	DATE:
AB	01/06/15
CHECKED BY:	DATE:
ER	01/06/15
APPROVED BY:	DATE:
ER	01/06/15

DRAWING TITLE: 3P MIC Connector, Male

SIZE	DWG NO.	ELECTRONIC FILE	REV
A4	PSG01309-01	PSG01309-1	1.0

SCALE: NTS | U.O.M.: mm (inch) | SHEET: 1 of 1