THIS DRAWING IS UNPUBLISHED. RELEASED FOR PUBLICATION – ,– .
© COPYRIGHT – By – ALL RIGHTS RESERVED.

LOC	DIST
H	—

REVISIONS

P	LTR	DESCRIPTION	DATE	DWN	APVD
	A	INITIAL RELEASE	18JAN2013	GSK	BvH
	A1	ECR–14–011671	14AUG2014	GSK	BvH

NOTES:
Tolerances cable lengths:

0m to 0.5m	+30mm
0.5m to 1.0m	+50mm
1.0m to 3.0m	+100mm
< 3.0m	+1.5%

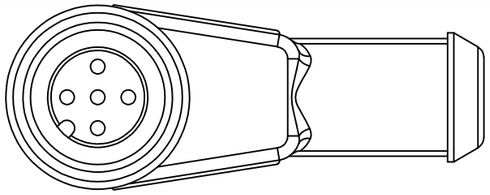

VIEW 'A'

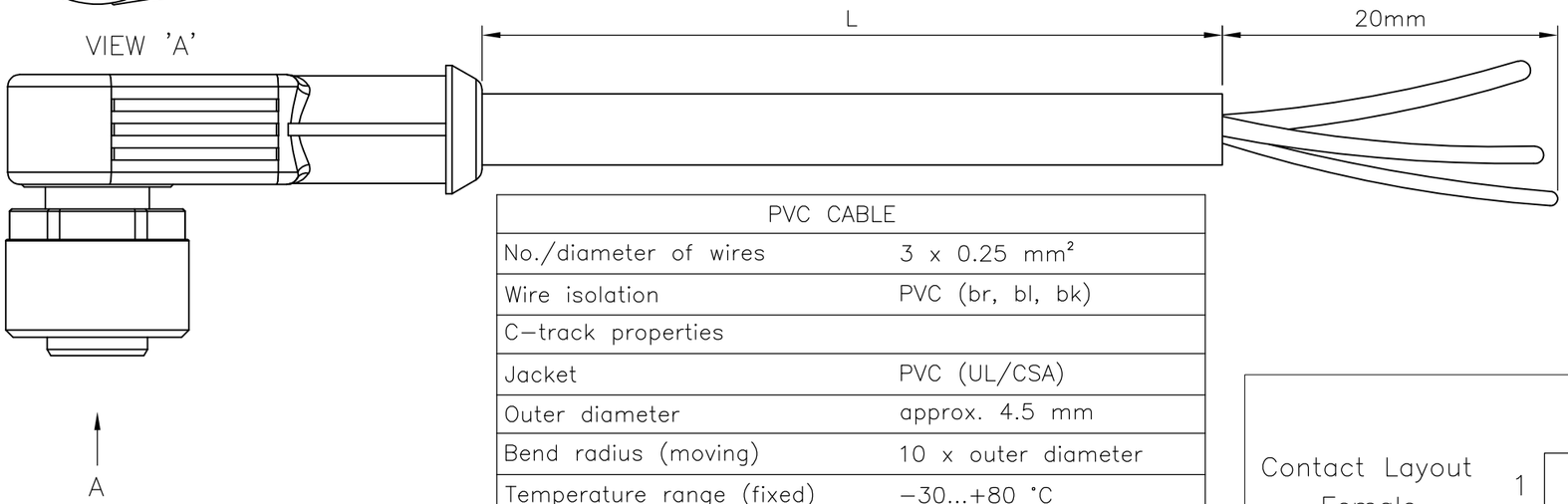

PVC CABLE	
No./diameter of wires	3 x 0.25 mm²
Wire isolation	PVC (br, bl, bk)
C–track properties	
Jacket	PVC (UL/CSA)
Outer diameter	approx. 4.5 mm
Bend radius (moving)	10 x outer diameter
Temperature range (fixed)	–30...+80 °C
Temperature range (mobile)	–5...+80 °C

Schematic diagram

Contact Layout
Female

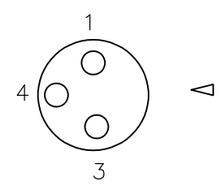

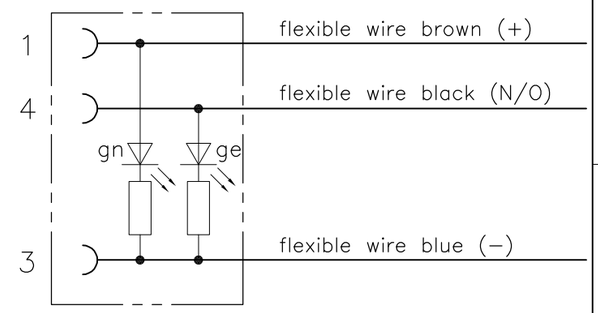

TECHNICAL DATA	
Operating voltage	24 V DC ±25 %
Operating current per contact	max. 4 A
Locking of ports	Screw thread M8 x 1 mm (recommended torque 0.4 Nm) self–securing
Protection	IP65 and IP67 when plugged and screwed down (EN 60529)

PUR CABLE	
No./diameter of wires	3 x 0.25 mm²
Wire isolation	PP (br, bl, bk)
C–track properties	5 million
Jacket	PUR (UL/CSA)
Outer diameter	approx. 4.1 mm
Bend radius (moving)	10 x outer diameter
Temperature range (fixed)	–40...+80 °C
Temperature range (mobile)	–25...+80 °C

	LENGTH"L"	MATERIAL	JACKET COLOR	TE PN	DESCRIPTION	ITEM
4 pos	10mtr	PVC	Black	1–2273012–4	4x22AWG PVC 10.0m	8
	5mtr			1–2273012–3	4x22AWG PVC 5.0m	7
	3mtr			1–2273012–2	4x22AWG PVC 3.0m	6
	1.5mtr			1–2273012–1	4x22AWG PVC 1.5m	5
4 pos	10mtr	PUR	Black	2273012–4	4x22AWG PUR 10.0m	4
	5mtr			2273012–3	4x22AWG PUR 5.0m	3
	3mtr			2273012–2	4x22AWG PUR 3.0m	2
	1.5mtr			2273012–1	4x22AWG PUR 1.5m	1

THIS DRAWING IS A CONTROLLED DOCUMENT.

DIMENSIONS: mm

TOLERANCES UNLESS OTHERWISE SPECIFIED:

0 PLC	± –
1 PLC	± –
2 PLC	± –
3 PLC	± –
4 PLC	± –
ANGLES	± –

MATERIAL –
FINISH –

DWN SATHISH KUMAR .G 18JAN2013
CHK B.VELDHOVEN 18JAN2013
APVD A.VAN ZANDVOORT 18JAN2013
PRODUCT SPEC 108–19483
APPLICATION SPEC 114–32127
WEIGHT –

TE Connectivity

NAME M8 X 1.0 ANGLED SOCKET PIGTAIL LED
–

SIZE	CAGE CODE	DRAWING NO	RESTRICTED TO
A3	00779	C–2273012	—

CUSTOMER DRAWING | SCALE NTS | SHEET 1 OF 1 | REV A1