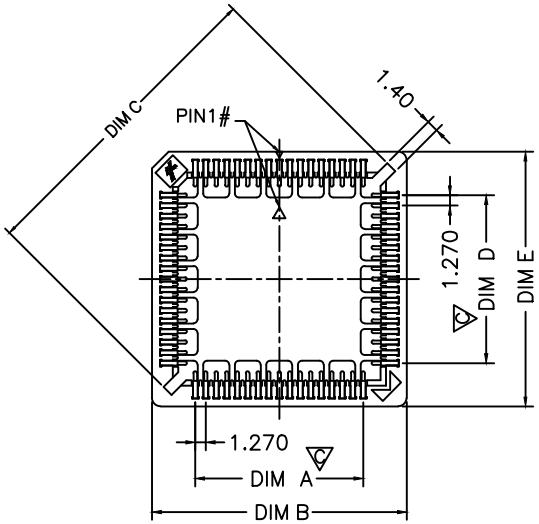

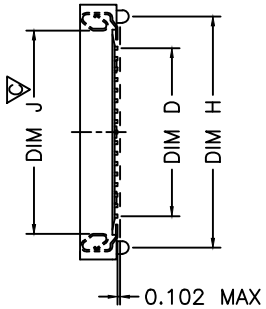

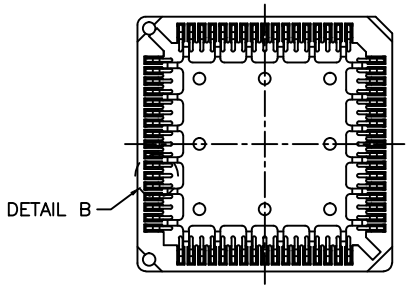

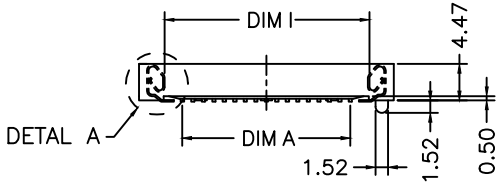

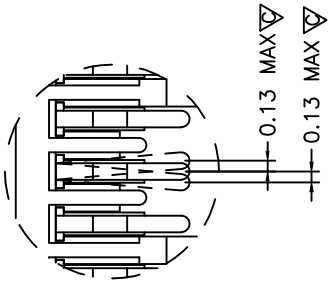

DETAIL B

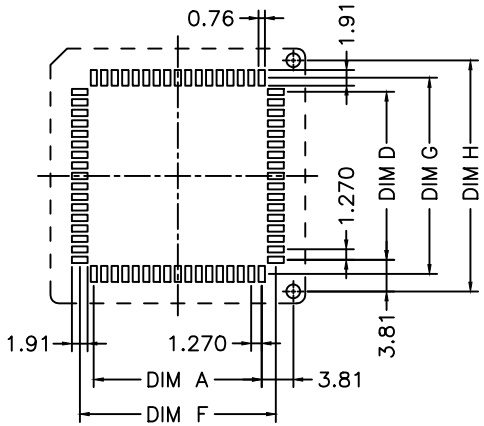

FIG. 1

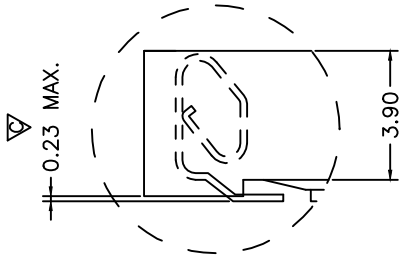

DETAIL A

NOTE: DIMENSIONAL MARK ▽ TO BE CHECKED BY OQC.

rev	ecn no	dr	date
AG	ELX-I-20939	SAL	5/21/15
-	-	-	-
AB	T05-0017	JH	1/24/05
AC	T05-0114	JH	5/9/05
AD	T05-0212	JH	9/21/05
AE	T06-0070	JH	5/8/06
AF	T11-0002	JH	1/11/11

www.fciconnect.com			surface -	tolerance std		projection	MM
			TOLERANCES UNLESS OTHERWISE SPECIFIED				
Dr	Jason Hsu	1/11/11	ANGULAR	LINEAR	0.X ± 0.25	size A4	Scale N/A
Eng	Jason Hsu	1/11/11			0.XX ± 0.15		
Chr	S Alosius	5/21/15	0° ±5°		0.XXX ± 0.10	ECN	ELX-I-20939
Appr	Biju K Paul	5/21/15	Product family			Spec ref	
title	PLCC SMT Socket				dwg no	69802	Rev. AG
catalog no	-				CUSTOMER		sheet 1 of 5

REV F - 2006-04-17

TABLE I

NO. OF CONTACTS	DIM. A ±0.20	DIM. B ±0.20	DIM. C ±0.20	DIM. D ±0.20	DIM. E MAX.	DIM. F ±0.10	DIM. G ±0.10	DIM. H ±0.20	DIM. I ±0.20	DIM. J ±0.20
32	7.62	17.78	22.50	10.16	20.32	11.02	13.56	17.78	11.94	14.48
44	12.70	22.86	27.50	12.70	22.86	16.10	16.10	20.32	17.02	

TABLE II

PART NO.	WITH POLARIZING PEGS	PACKAGING BY PVC TUBE	PACKAGING BY TAPE & REEL	MCK PART NO.
69802–0XXLF	✓	✓		PLCC–XXP–T–SMT–P–LF
69802–1XXLF		✓		PLCC–XXP–T–SMT–LF
69802–4XXLF			✓	PLCC–XXP–T–SMT–TR–LF

NOTE:
ORDERING DATA: 69802 - X XX LF

- LF: LEAD FREE
- XX: NO OF CONTACTS
- X: SEE TABLE II

www.fciconnect.com			surface –	tolerance std		projection	MM	
			TOLERANCES UNLESS OTHERWISE SPECIFIED					
Dr	Jason Hsu	1/11/11	ANGULAR	LINEAR	0.X	± 0.25	size A4	Scale N/A
Eng	Jason Hsu	1/11/11			0.XX	± 0.15		
Chr	S Alosius	5/21/15	0° ±5°		0.XXX	± 0.10	ECN	ELX-I-20939
Appr	Biju K Paul	5/21/15	Product family				Spec ref	
title	PLCC SMT Socket				dwg no	69802		Rev. AG
catalog no			–		CUSTOMER		sheet 2 of 5	

REV F – 2006-04-17

NOTES:

1. MATERIAL:
   1-1 HOUSING : PPS GB8411,UL94V-0 COLOR IN BROWN.
   PLATING : 150u" LEAD FREE TIN MIN. OVER 40u" NICKEL MIN.
   CONTACT : PHOSPHOR BRONZE C5212RH.
2. THE "FCI" LOGO IS LOCATED AS SHOWN.
3. RECOMMEND PCB LAYOUT IS SHOWN IN FIG.1.
4. COPLANARITY REQUIREMENT;
   A. CONTACT MUST BE BELOW HOUSING BOTTOM SURFACE WITHIN 0.23MM.
   B. CONTACT SEATING LINE MUST BE WITHIN 0.102MM.
5. THE POSITION OF PIN#1 IN THE CENTER PAD IS AS SHOWN.
6. THE PACKAGING INFORMATION SHOWS ON SHEET 4 &5.
7. PRODUCT SPECIFICATION; GES-12-158.
8. MANUFACTURING PROCESS COMPATIBILITY: THE HOUSING WILL WITHSTAND EXPOSURE TO 245°C PEAK TEMPERATURE FOR 5 SECOND IN A IR REFLOW APPLICATION.

www.fciconnect.com			surface -		tolerance std		projection	MM
			TOLERANCES UNLESS OTHERWISE SPECIFIED					
Dr	Jason Hsu	1/11/11	ANGULAR	LINEAR	0.X	± 0.25	size A4	Scale N/A
Eng	Jason Hsu	1/11/11			0.XX	± 0.15		
Chr	S Alosius	5/21/15	0° ±5°		0.XXX	± 0.10	ECN	ELX-I-20939
Appr	Biju K Paul	5/21/15	Product family				Spec ref	
title	PLCC SMT Socket				dwg no	69802		Rev. AG
catalog no			-		CUSTOMER		sheet 3 of 5	

REV F - 2006-04-17

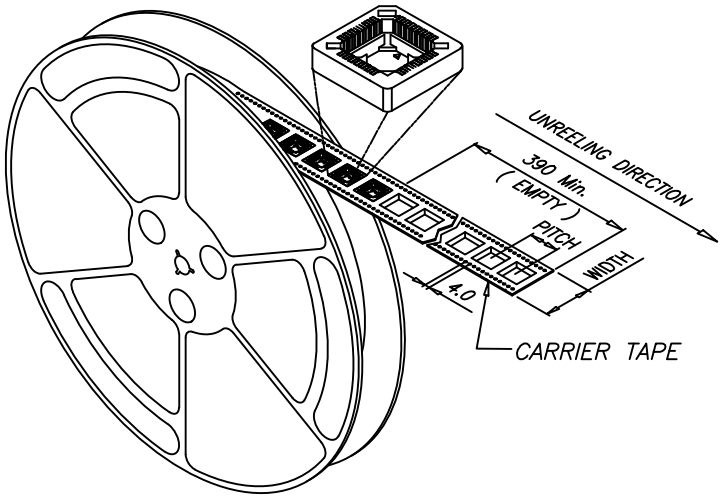

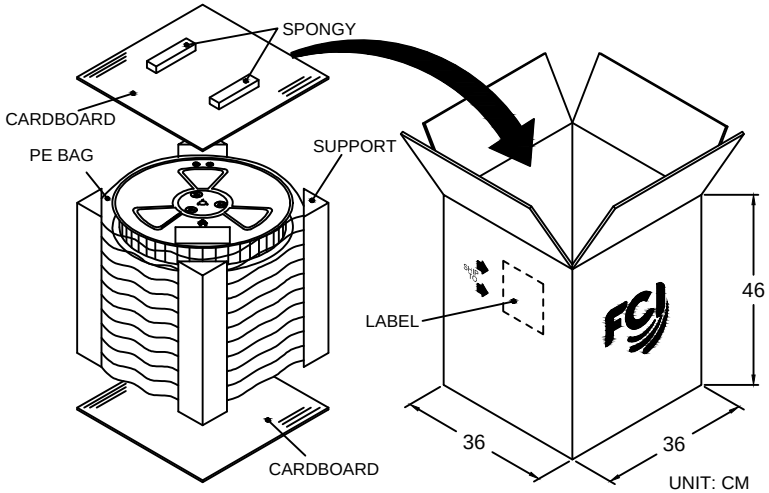

PACKING FOR 32P & 44P

TABLE III

NO. OF PIN.	WIDTH	PITCH	PCS/REEL	REEL/CARTON	TOTAL (PCS)
32P	32.0	24.00	390	10	3900
44P	44.0	32.00	250	8	2000

*REEL DIAMETER: ⌀13 in"

www.fciconnect.com			surface - √		tolerance std		projection	MM
			TOLERANCES UNLESS OTHERWISE SPECIFIED					
Dr	Jason Hsu	1/11/11	ANGULAR	LINEAR	0.X	± 0.25	size A4	Scale N/A
Eng	Jason Hsu	1/11/11			0.XX	± 0.15		
Chr	S Alosius	5/21/15	0° ±5°		0.XXX	± 0.10	ECN	ELX-I-20939
Appr	Biju K Paul	5/21/15	Product family				Spec ref	
title	PLCC SMT Socket				dwg no	69802		Rev. AG
catalog no			-		CUSTOMER		sheet 4 of 5	

REV F - 2006-04-17

TABLE IV

A / P PART NO.	69802-X32X	69802-X44X
DESCRIPTION	32P	44P
PCS / TUBE	28	25
PCS / INNER BOX	728	500
INNER BOX / CARTON (WITH SOCKET)	10	10
INNER BOX / CARTON (W / O SOCKET)	0	0
TOTAL (PCS)	7280	5000
N.W.	10.0 KG	8.5 KG
G.W.	18.0 KG	17.0 KG

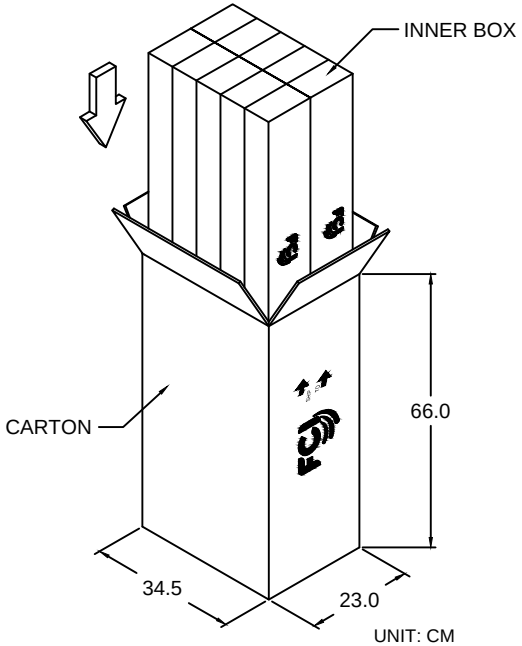

PACKING FOR 32P & 44P

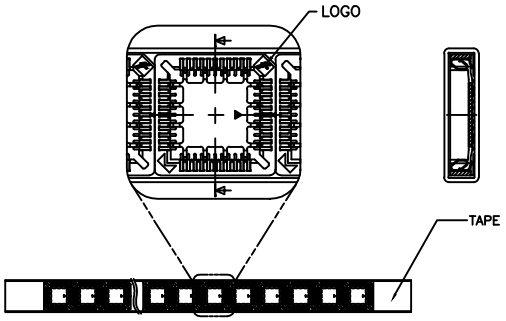

PACKAGING DIRECTION FOR PVC TUBE

www.fciconnect.com			surface -		tolerance std		projection	MM
			TOLERANCES UNLESS OTHERWISE SPECIFIED					
Dr	Jason Hsu	1/11/11	ANGULAR	LINEAR	0.X	± 0.25	size A4	Scale N/A
Eng	Jason Hsu	1/11/11			0.XX	± 0.15		
Chr	S Alosius	5/21/15	0° ±5°		0.XXX	± 0.10	ECN	ELX-I-20939
Appr	Biju K Paul	5/21/15	Product family				Spec ref	
title	PLCC SMT Socket				dwg no	69802		Rev. AG
catalog no			-		CUSTOMER		sheet 5 of 5	

REV F - 2006-04-17