THIS DRAWING IS UNPUBLISHED. RELEASED FOR PUBLICATION 2006
© COPYRIGHT 2006 BY - ALL RIGHTS RESERVED.

LOC	DIST
A1	-

REVISIONS

P	LTR	DESCRIPTION	DATE	DWN	APVD
	J4	REVISED PER ECO-11-005030	24MAR2011	RK	HMR
	J5	ECR-15-003938	26MAR2015	RK	MKO

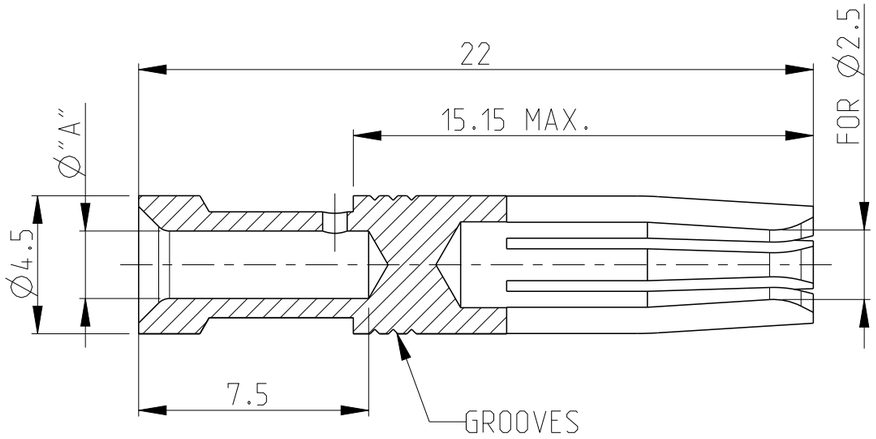

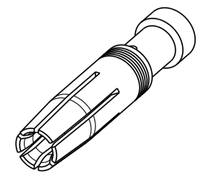

SCALE 2:1

Notes

1. MATERIAL: BRASS
2. FINISH SILVER PLATING: 2 µm Ag MIN. OVER Cu
3. FINISH GOLD PLATING: 0.75 µm Au MIN. OVER Ni
4. FINISH TIN PLATING: 0.6 µm Sn. MIN. OVER Cu
5. VENTILATION HOLE PRESENT ON ALL PARTS
6. WEIGHT: 0.00160 kg, PER PIECE (APPROX.)
7. PACKAGING: 50 PIECES IN POLYBAG
8. PACKAGING: 500 PIECES IN POLYBAG & CARTON
9. PACKAGING: 20000 PIECES IN POLYBAGS & CARTONS
10. SUITABLE PIN CONTACT: PN 1105100
11. SUITABLE INSERTS: SERIES HA, HE, HVE, HVS
12. SUITABLE CRIMP TOOL: PN 1-1105851-8
13. SUITABLE INSERTION TOOL: PN 0-1102855-6
14. SUITABLE EXTRACTION TOOL: PN 0-1102855-7
15. STANDARDS: DIN EN 61984, DIN EN 60664-1

ORDERING TEXT	PLATING	CROSS SECTION [MM 2]	DIMS "A"	NO.OF GROOVES / MARKINGS	7 P.U.=50 BAG	8 P.U.=500 BOX	9 P.U.=20000 BOX
HE/HA-C-Bu.Sn 4,0mm 2	TIN 4	4.0	2.8	-	-	5-0	5-3
HE/HA-C-Bu.Sn 2,5mm 2		2.5	2.2	3	-	4-0	4-3
HE/HA-C-Bu.Sn 1,5mm 2		1.5	1.7	2	-	3-0	3-3
HE/HA-C-Bu.Au 4,0mm 2	GOLD 3	4.0	2.8	-	5-2	5-9	-
HE/HA-C-Bu.Au 2,5mm 2		2.5	2.2	3	4-2	4-9	-
HE/HA-C-Bu.Au 1,5mm 2		1.5	1.7	2	3-2	3-9	-
HE/HA-C-Bu.Au 0,75-1,0mm 2		0.75-1.0	1.4	1	2-2	2-9	-
HE/HA-C-Bu.Au 0,5mm 2		0.5	1.1	-	1-2	1-9	-
HE/HA-C-Bu.Au 0,14-0,37mm 2		0.14-0.37	0.9	3	6-2	6-9	-
HE/HA-C-Bu.Ag 4,0mm 2	SILVER 2	4.0	2.8	-	5-1	5-8	-
HE/HA-C-Bu.Ag 2,5mm 2		2.5	2.2	3	4-1	4-8	-
HE/HA-C-Bu.Ag 1,5mm 2		1.5	1.7	2	3-1	3-8	-
HE/HA-C-Bu.Ag 0,75-1,0mm 2		0.75-1.0	1.4	1	2-1	2-8	-
HE/HA-C-Bu.Ag 0,5mm 2		0.5	1.1	-	1-1	1-8	-
HE/HA-C-Bu.Ag 0,14-0,37mm 2		0.14-0.37	0.9	3	6-1	6-8	-

PARTS LIST

THIS DRAWING IS A CONTROLLED DOCUMENT.

DIMENSIONS: mm

TOLERANCES UNLESS OTHERWISE SPECIFIED: ISO 8075, DIN ISO 2768 mH-E, DIN 16901-120
0 PLC ±-
1 PLC ±-
2 PLC ±-
3 PLC ±-
4 PLC ±-
ANGLES ±-

MATERIAL: 1
FINISH: 2 3 4

DWN 20SEP2007 G.WROBLEWSKI
CHK 20SEP2007 H.BRAUN
APVD 20SEP2007 T. SCHNURPFEIL
PRODUCT SPEC 108-74004
APPLICATION SPEC 114-74003
WEIGHT -

TE Connectivity

NAME: SOCKET CONTACT SERIES HA, HE, HVE

SIZE	CAGE CODE	DRAWING NO	RESTRICTED TO
A3	00779	C-1105101	-

Customer Drawing | SCALE 5:1 | SHEET 1 OF 1 | REV J5