THIS DRAWING IS UNPUBLISHED. RELEASED FOR PUBLICATION –,– .
© COPYRIGHT – By – ALL RIGHTS RESERVED.

LOC	DIST
G	14

REVISIONS

P	LTR	DESCRIPTION	DATE	DWN	APVD
	G	REVISED PER ECO–14–015277	27FEB2015	NK	DR

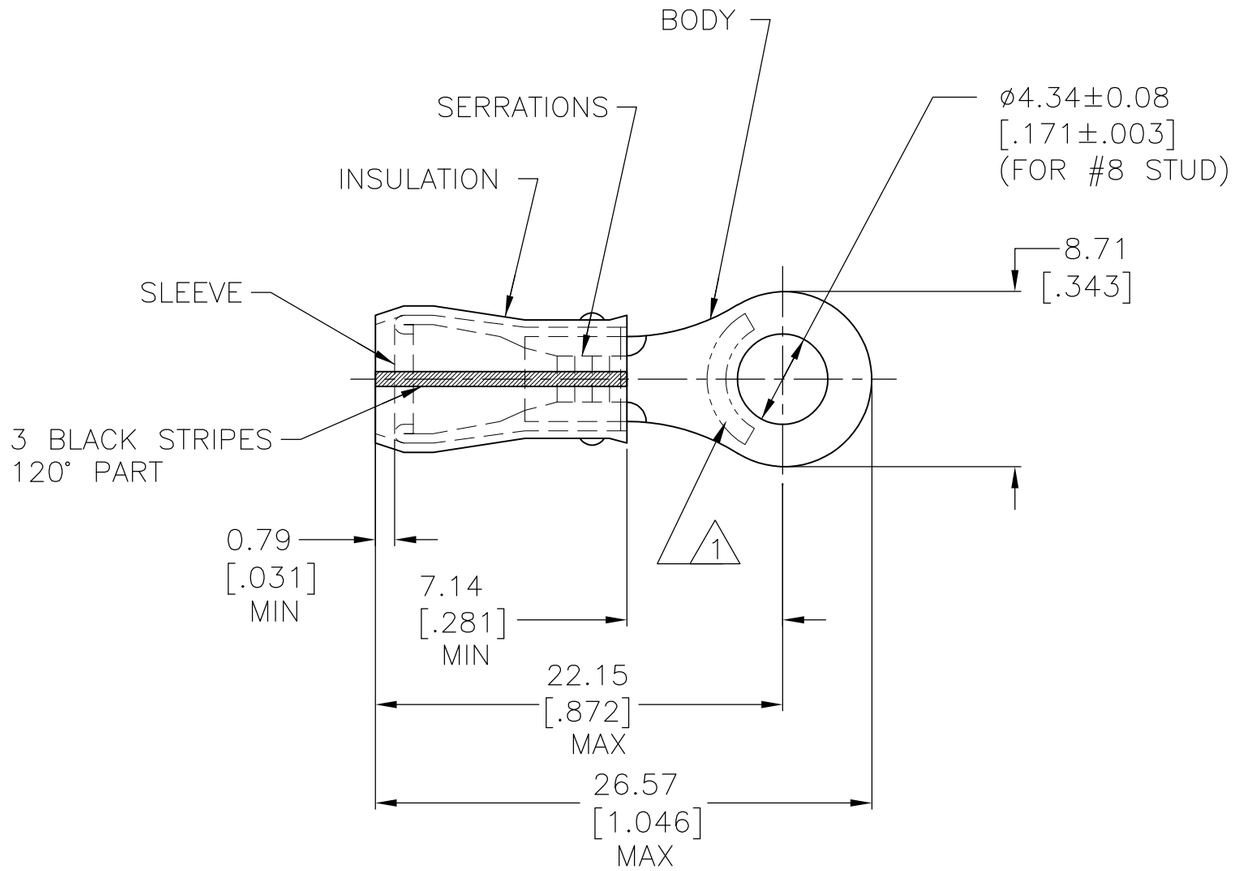

AMP WIRE RANGE	E13288	LR7189 Certified
16–14 AWG SOLID OR STRANDED	16–14 AWG SOLID OR STRANDED	16–14 AWG SOLID OR STRANDED

1. STAMP AMP 16–14 HD* APPROX AS SHOWN.
2. WIRE INSUL DIA, 3.81–6.35 [.150–.250].
3. TONGUE MATERIAL THK, 1.22±0.05[.048±.002].

QTY	PACKAGE TYPE	PART NO
50	LOOSE PIECE, BOX	8–35106–2
2500	ON TAPE, REEL	2–35106–1
500	LOOSE PIECE	35106

AMP INCORPORATED
CUSTOMER SERVICE SYSTEM

FOR ADDITIONAL PRODUCT INFORMATION OR COPIES OF DRAWINGS AND TECHNICAL DOCUMENTS	PRODUCT INFORMATION CENTER 1–800–522–6752
FOR APPLICATION TOOLING INFORMATION	TOOLING ASSISTANCE CENTER 1–800–722–1111
FOR ORDER ENTRY	1–800–526–5142

MAX RECOMMENDED OPERATING TEMPERATURE: 105°C[221°F]

VOLTAGE RATING: 300 V MAX

CIRCULAR MIL AREA: 1.04mm² –2.62mm² [2050–5180]

THIS DRAWING IS A CONTROLLED DOCUMENT.

DIMENSIONS: mm [INCHES]

TOLERANCES UNLESS OTHERWISE SPECIFIED:

0 PLC	± –
1 PLC	± –
2 PLC	± 0.20[.008]
3 PLC	± –
4 PLC	± –
ANGLES	± –

MATERIAL: BODY,SLV,COPPER PER ASTM B 152 INSUL,NYLON,COLOR,YELLOW

FINISH: BODY & SLV,TIN PLATE PER MIL–T–10727

DWN	M ELLIS	28SEP95
CHK	C PRESNELL	28SEP95
APVD	N BIRCH	28SEP95
PRODUCT SPEC	UL 486A	
APPLICATION SPEC	—	
WEIGHT	—	

TE Connectivity

NAME: TERMINAL, RING TONGUE, PIDG™, WIRE SIZE,16–14 HD AWG

SIZE	CAGE CODE	DRAWING NO	RESTRICTED TO
A3	00779	C–35106	—

CUSTOMER DRAWING | SCALE 4:1 | SHEET 1 OF 1 | REV G