MICRO SWITCH
A DIVISION OF MINNEAPOLIS-HONEYWELL REGULATOR COMPANY
FREEPORT, ILLINOIS
FED. MFR. CODE 91929

SWITCH – BASIC

CATALOG LISTING
BZ-2AW855T1

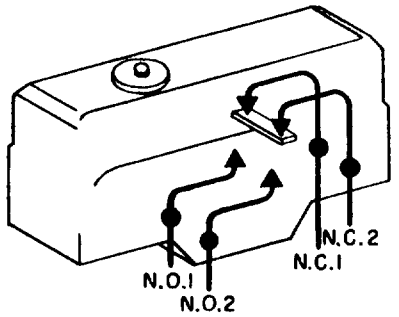

CIRCUIT DIAGRAM

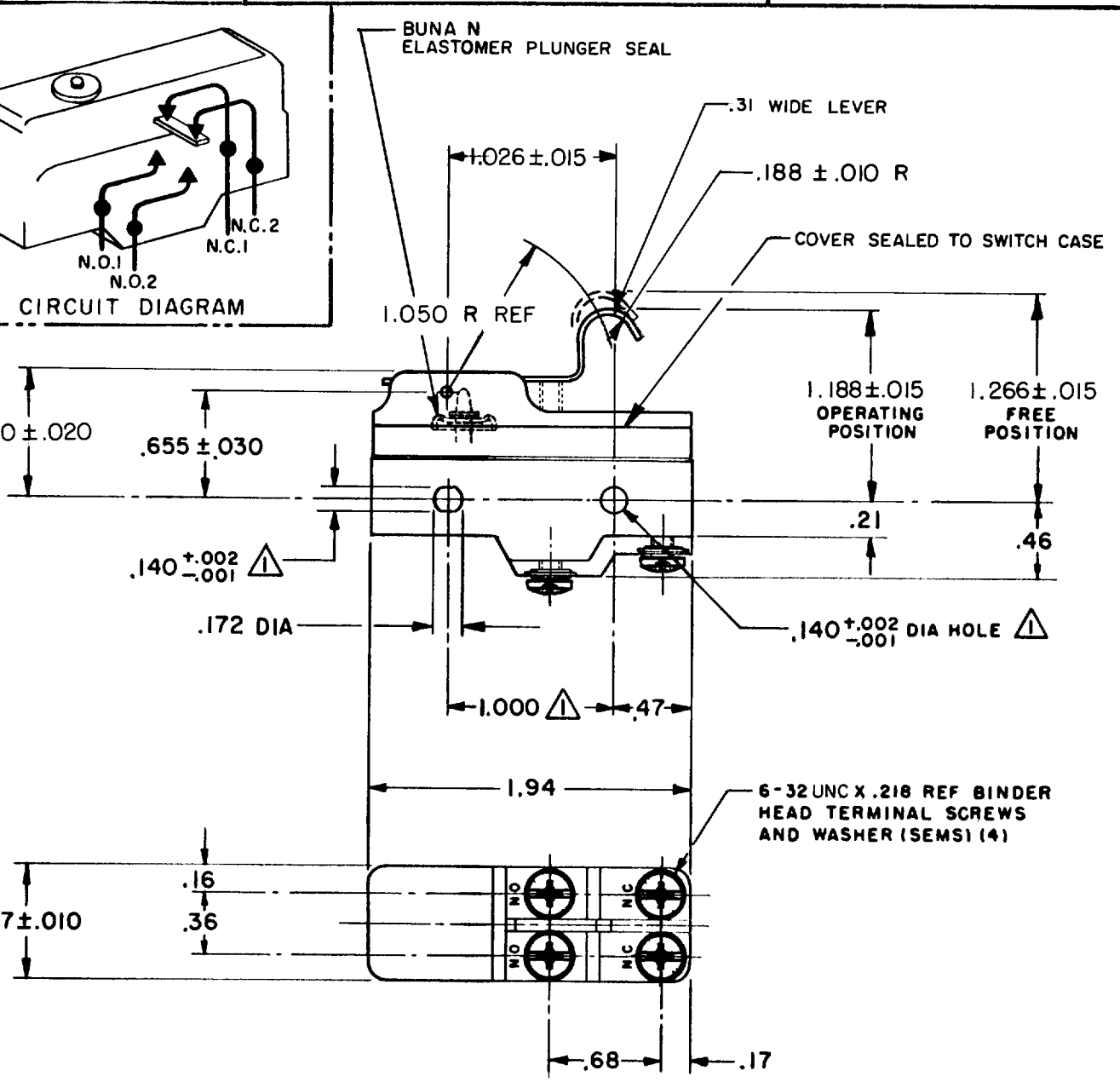

NOTES

1. MOUNTING HOLES WILL ACCEPT PINS OR SCREWS OF .139 MAX DIA ON 1.000 ± .002 CENTERS.
2 – SUITABLE ONLY FOR APPLICATIONS IMPARTING A RAPID STROKE TO THE SWITCH PLUNGER
3 – SEALED CONSTRUCTION PROVIDES SPLASH RESISTANCE

THIS DRAWING COVERS A PROPRIETARY ITEM AND IS THE PROPERTY OF MICRO SWITCH, A DIVISION OF MINNEAPOLIS-HONEYWELL REGULATOR CO. THIS DRAWING IS NOT TO BE COPIED OR USED WITHOUT THE APPROVAL OF MICRO SWITCH.

CHARACTERISTICS

OPERATING FORCE	8 1/2 OZ MAX
RELEASE FORCE	1 1/2 OZ MIN
DIFFERENTIAL TRAVEL	.008 – .030
OVERTRAVEL	.094 MIN

ELECTRICAL DATA

CONTACT ARRANGEMENT
SEE CIRCUIT DIAGRAM

L73

15A 125, 250 OR 480 VAC
1A 125 VDC, 0.5A 250 VDC
1/4 HP 125 VAC, 1/2 HP 250 VAC

SCALE FULL
DO NOT SCALE PRINT

UNLESS OTHERWISE SPECIFIED
DIMENSIONS ARE IN INCHES
TOLERANCES ARE:

ONE PLACE	(.0)	±.030
TWO PLACE	(.00)	±.015
THREE PLACE	(.000)	±.005
ANGLES		±

WEIGHT

CATALOG LISTING
BZ-2AW855T1
PAGE 1 OF 1
M
DRAWING NUMBER
ISSUE 6

(M) X 25616 ISSUE 1
REPLACES
RELEASE NO. SR-10322

REVISIONS

A	CO 28424	SRH 26 JAN 71	CHECK
B	0032293	BEN 13 JUL 73	5 JUNE '62
C	0067209	JAP 2 MAY 90	E.B.
D	CO-69351-D	JWB 18 JUL 91	CHECK
E	207440	CSL 14 FEB 03	5 JUNE '62

DRAWN OMW 1 JUN 62
CHECK DAW
RASTER
FO-50378