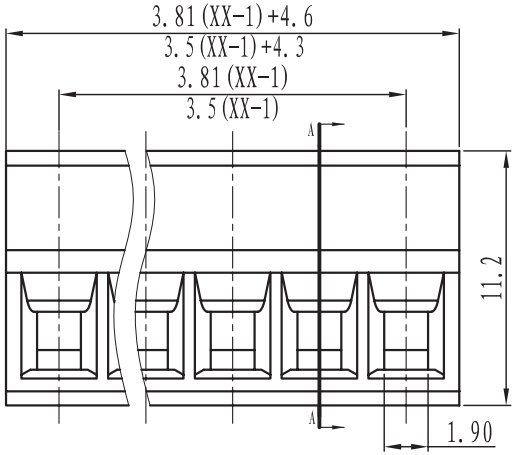

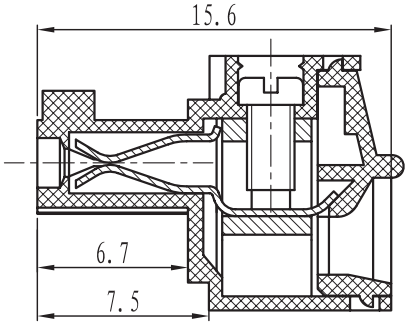

SECTION A-A

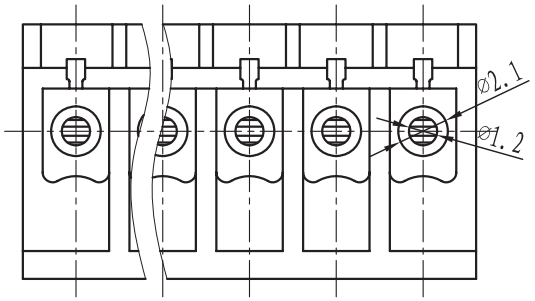

Electrical

Standard:	UL	IEC
Rated voltage:	300V	250V
Rated current:	8A	10A

Contact resinstance: 20mΩ

Wire range: 28-16AWG 1.5mm²

Withstanding voltage: AC2000V/1Min

Insulation resistance: 500MΩ/DC500V

Mechanical

Temp.Range: -40° C~+105° C

Torque: 0.2Nm(1.7lb`in)

Strip length: 6-7mm

Dimensions

Pitch: 3.81mm/3.5mm

Poles: 2P-24P

Material

Housing: PA66,UL94V-0

Screws: M2,steel Zinc plated

Wire guard: Brass,Ni plated

Clamp: Phosphor bronze,Ni plated

TOLERANCES EXCEPT AS NOTED

	linear dimension					fillet	chamfer		∠ short angle sid				≡	—	▱	//	⊥
variable range	to 6	over 6 to 30	over 30 to 120	over 120 to 480	over 480 to	all	to 6	over 6 to	to 10	over 10 to 50	over 50 to 120	over 120 to	all	to 5	over 5 to 30	over 30 to 120	over 120 to
tolerance	±0.1	±0.2	±0.3	±0.5	±0.9	±0.2	±0.5	±1	1°	30′	20′	10′	0.5	0.025	0.06	0.12	0.4

UNITS	mm	SIZE	A4	SCALE	
IMO					

FIRST ANGLE PROJECTION

NAME: 20.1550M-E 21.1550M-E