THIS DRAWING IS UNPUBLISHED. RELEASED FOR PUBLICATION - ,- .
© COPYRIGHT - By - ALL RIGHTS RESERVED.

LOC	DIST
AD	00

REVISIONS

P	LTR	DESCRIPTION	DATE	DWN	APVD
	AD3	REVISED PER ECO-15-005247	07APR2015	NK	MM

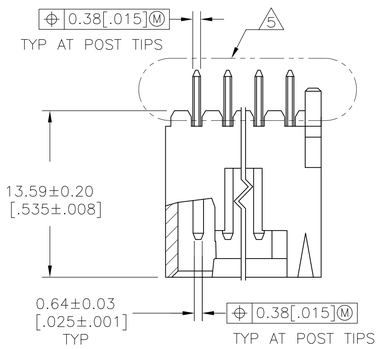

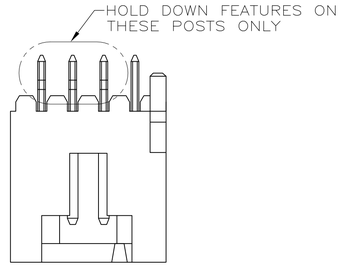

HOLD DOWN CONFIGURATION FOR
4 POSITION ASSEMBLY ONLY

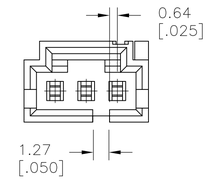

DETAIL
FOR 3 POSN ONLY

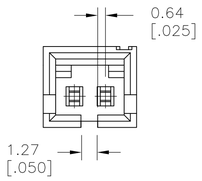

DETAIL
FOR 2 POSN ONLY

1. 0.00254–0.00508 [.000100–.000200] BRIGHT TIN–LEAD OVER 0.00127 [.000050] NICKEL.
2. POINT OF MEASUREMENT FOR PLATING THICKNESS.
3. THESE DIMENSIONS APPLY WHERE THE POST INTERSECTS THE HOUSING.
4. ON ASSEMBLIES WITH FOUR OR MORE POSITIONS, TWO POLARIZATION SLOTS.
5. SELECT POST TAILS FORMED TO PROVIDE CONNECTOR HOLD DOWN UNTIL SOLDERED.CONFIGURATION ACCEPTS 0.69–2.03 [.027–.080] THICK PRINTED CIRCUIT BOARD. (SEE DETAIL Z).
6. MATERIAL: HOUSING– FLAME RETARDANT THERMOPLASTIC, COLOR–BLACK. POSTS– BRASS.
7. 0.00254–0.00508 [.000100–.000200] BRIGHT TIN OVER 0.00127 [.000050] NICKEL.
8. HIGH TEMPERATURE CONFIGURATION.
9. 0.00254–0.00508 [.000100–.000200] MATTE TIN OVER 0.00127 [.000050] NICKEL.
10. OBSOLETE PARTS: OBSOLETE CIS STREAMLINING PER D.RENAUD/D.SINISI.

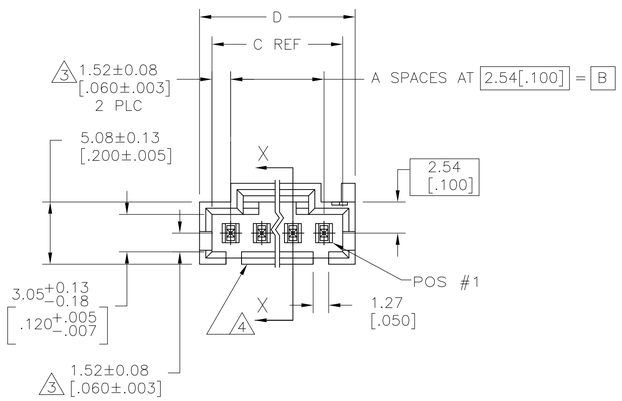

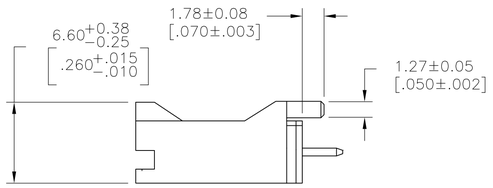

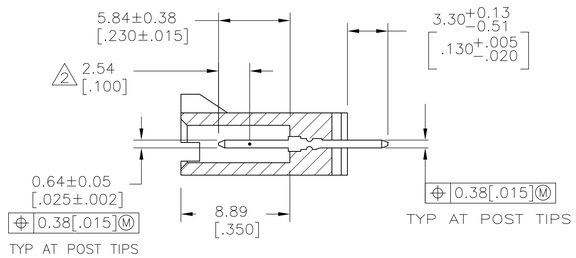

SECTION X–X

	REMARKS	PLATING	D	C	B	A	NO OF POSN	ASSEMBLY PART NUMBER
	8	9	27.94 [1.100]	25.91 [1.020]	22.86 [.900]	9	10	5–104450–9
10 OBSOLETE	8	9	25.4 [1.000]	23.37 [.920]	20.32 [.800]	8	9	~~5–104450–8~~
	8	9	22.86 [.900]	20.83 [.820]	17.78 [.700]	7	8	5–104450–7
10 OBSOLETE	8	9	20.32 [.800]	18.29 [.720]	15.24 [.600]	6	7	~~5–104450–6~~
	8	9	17.78 [.700]	15.75 [.620]	12.7 [.500]	5	6	5–104450–5
	8	9	15.24 [.600]	13.21 [.520]	10.16 [.400]	4	5	5–104450–4
	8	9	12.7 [.500]	10.67 [.420]	7.62 [.300]	3	4	5–104450–3
	8	9	10.16 [.400]	8.13 [.320]	5.08 [.200]	2	3	5–104450–2
	8	9	7.62 [.300]	5.59 [.220]	2.54 [.100]	1	2	5–104450–1
10 OBSOLETE	–	7	20.32 [.800]	18.29 [.720]	15.24 [.600]	6	7	~~1–104450–3~~
	–	7	15.24 [.600]	13.21 [.520]	10.16 [.400]	4	5	1–104450–2
	–	7	10.16 [.400]	8.13 [.320]	5.08 [.200]	2	3	1–104450–1
	–	7	12.7 [.500]	10.67 [.420]	7.62 [.300]	3	4	1–104450–0
	–	1	27.94 [1.100]	25.91 [1.020]	22.86 [.900]	9	10	104450–9
10 OBSOLETE	–	1	25.4 [1.000]	23.37 [.920]	20.32 [.800]	8	9	~~104450–8~~
	–	1	22.86 [.900]	20.83 [.820]	17.78 [.700]	7	8	104450–7
	–	1	20.32 [.800]	18.29 [.720]	15.24 [.600]	6	7	104450–6
	–	1	17.78 [.700]	15.75 [.620]	12.7 [.500]	5	6	104450–5
	–	1	15.24 [.600]	13.21 [.520]	10.16 [.400]	4	5	104450–4
	–	1	12.7 [.500]	10.67 [.420]	7.62 [.300]	3	4	104450–3
	–	1	10.16 [.400]	8.13 [.320]	5.08 [.200]	2	3	104450–2
	–	1	7.62 [.300]	5.59 [.220]	2.54 [.100]	1	2	104450–1

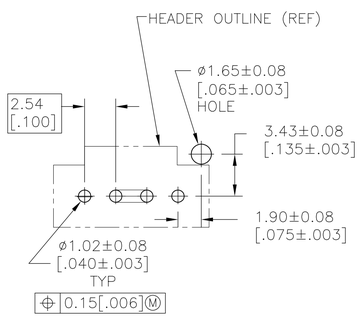

RECOMMENDED HOLE LAYOUT

DETAIL Z
POST DETAIL TYP
2 POST MINIMUM

THIS DRAWING IS A CONTROLLED DOCUMENT.

DIMENSIONS: mm

TOLERANCES UNLESS OTHERWISE SPECIFIED:
0 PLC ± –
1 PLC ± –
2 PLC ± –
3 PLC ± 0.38 [.005]
4 PLC ± –
ANGLES ± –

MATERIAL: SEE NOTE 6
FINISH: SEE TABLE

DWN R BROWN 09FEB01
CHK K WRIGHT 09FEB01
APVD K WRIGHT 09FEB01
PRODUCT SPEC 108–25034
APPLICATION SPEC –
WEIGHT –

TE Connectivity

NAME: HEADER ASSY, AMPMODU MTE, VERTICAL, WITH LATCH, SINGLE ROW, .100 CL, .025 SQ POSTS, PCB ORIENTATION, AND RETENTIVE POSTS

SIZE	CAGE CODE	DRAWING NO	RESTRICTED TO
A1	00779	C–104450	–

CUSTOMER DRAWING | SCALE 4:1 | SHEET 1 OF 1 | REV AD3