THIS DRAWING IS UNPUBLISHED. RELEASED FOR PUBLICATION – ,N/A .
© COPYRIGHT N/A By – ALL RIGHTS RESERVED.

LOC	DIST
—	—

REVISIONS

P	LTR	DESCRIPTION	DATE	DWN	APVD
	R	REVISED PER ECO-15-012510	12OCT15	KG	CD

1. THIS PLUG WILL MATE WITH ANY 8C8, SIZE 4 RECEPTACLE IN AMPLIMITE SERIES.
2. USE (8) SIZE 8 POWER, OR COAX PIN CONTACTS. CONSULT PRODUCT ENGINEERING FOR MORE DETAILS.

3. UL/CSA DESIGNATION STAMPED IN THIS AREA, OPTIONAL.
4. STEEL PER ASTM-A-109.
5. CADMIUM PLATED PER QQ-P-416, TYPE II, CLASS 2.
6. BRASS PER ASTM-B-36 AND MIL-C-50.
7. FINISH: PLATED GOLD PER ASTM-B-488, TYPE 3, CODE C, CLASS 1.25 OVER COPPER PLATE PER MIL-C-14550, CLASS IV.
8. FINISH: TIN PER ASTM-B-545 .000400 MIN THK OVER COPPER PER AMS2418 .000050 MIN THK.
9. GROUNDING INDENTS FOR 446405-4 & 5-446405-4 ONLY.
10. FINISH: ZINC PLATE PER ASTM-B-633 .000200-.000400 THK WITH SUPPPLEMENTARY CHROMATE (Cr3+).

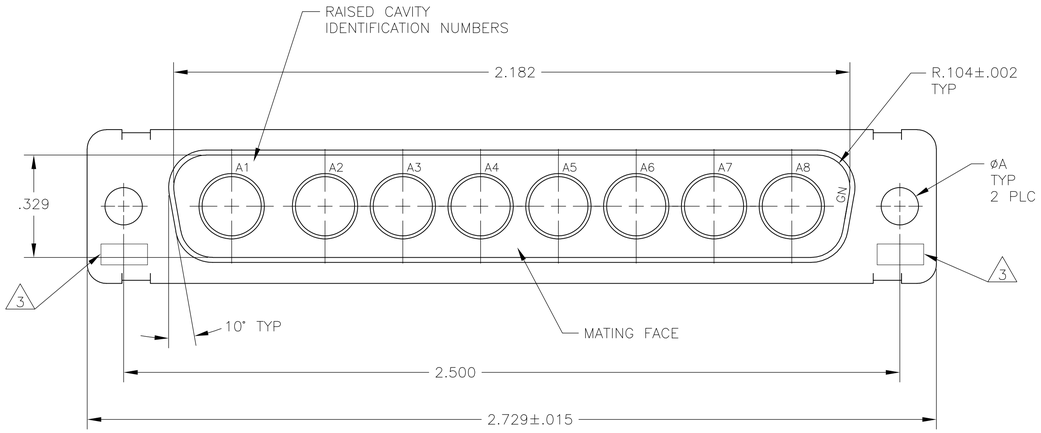

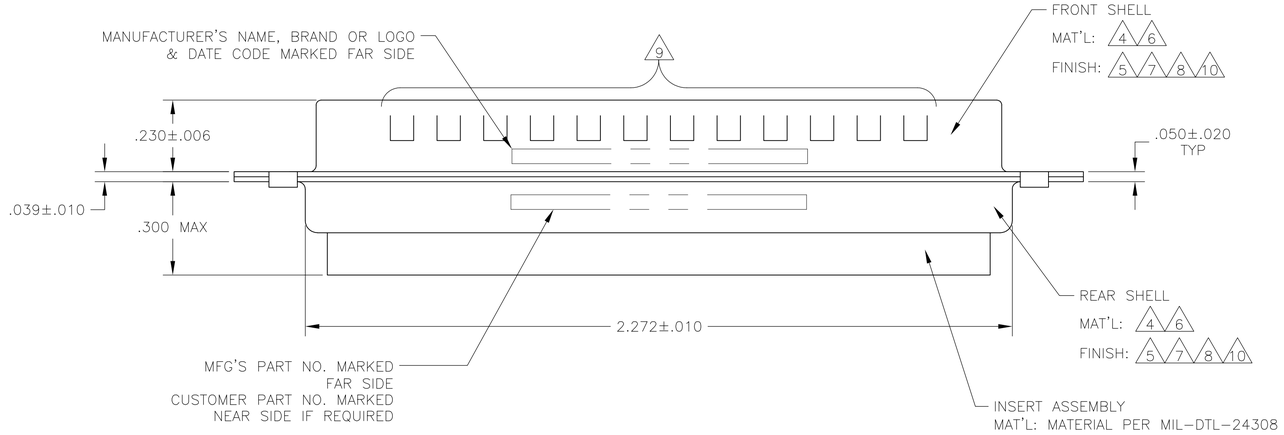

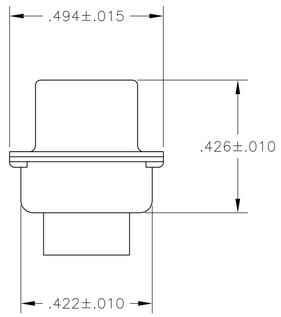

REMARKS	CUSTOMER PART NO.	ØA	DESCRIPTION	PART NO.
4 9 8	–	.120	MIL-C-24308 EQUIVALENT	5-446405-4
4 10	–	.120	–	5-446405-1
6 7	ST81D284-001	.120	–	446405-6
6 7	B010942-0041	.120	–	446405-5
4 8 9	97942-645A935H02	.120	–	446405-4
6 7	311P405-15P-B-15	.154	NON-MAGNETIC NASA QUALIFIED	446405-3
6 7	311P405-15P-B-12	.120	NON-MAGNETIC NASA QUALIFIED	446405-2
4 5	–	.120	MIL-C-24308 EQUIVALENT	446405-1

THIS DRAWING IS A CONTROLLED DOCUMENT.

DIMENSIONS: INCHES

TOLERANCES UNLESS OTHERWISE SPECIFIED:
0 PLC ± –
1 PLC ± –
2 PLC ± –
3 PLC ± .005[0.13]
4 PLC ± –
ANGLES ± 0°,30'

MATERIAL –
FINISH –

DWN 27-May-15 MANJUNATH G M
CHK 27-May-15 CHARLES THOMAS
APVD 27-May-15 CHARLES THOMAS
PRODUCT SPEC —
APPLICATION SPEC —
WEIGHT —

TE Connectivity

NAME
PLUG ASSEMBLY
AMPLIMITE 8C8
COAX MIX, SIZE 4

SIZE	CAGE CODE	DRAWING NO	RESTRICTED TO
A1	00779	C-446405	—

CUSTOMER DRAWING | SCALE 4:1 | SHEET 1 OF 1 | REV R

4805 (3/11)