CONN SIZE	FILTER DESIGNATION	FILTER CIRCUITS	CAPACITANCE VALUE	CAPACITANCE TOLERANCE	3 dB MAX CUTOFF FREQ (MHz)	DIELECTRIC WITHSTANDING VOLTAGE	CONTACT RATING	CONTACT RESIST	WORKING VOLTAGE DC −55°C TO +125°C	MINIMUM INSERTION LOSS–DECIBELS (dB) 5 MHz	10 MHz	20 MHz	50 MHz	100 MHz	200 MHz	500 MHz	1 GHz
25	A	Pi	310pF	±20%	17	300V	5A	010 OHM MAX	100V	–	–	3	7	13	21	36	43

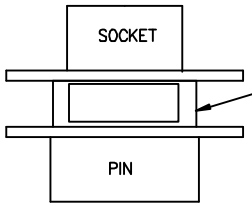

MARKING

API 56F725–001
XXXX XXXXXX
DATE CODE
MANUFACTURING CODE

1. SHELL: NICKEL PLATED HOUSING
2. INSULATORS: UL94V–0 HI TEMP
3. CONTACTS: COPPER ALLOY: .000015 GOLD IN PIN MATING AREA AND .000030 IN SOCKET CONTACT MATING AREAS
4. RADIO FREQUENCY GROUND CONTACT FROM THE CONNECTOR SHELL TO THE MATING CONNECTOR IS ASSURED BY A COAXIAL SPRING CLIP

FILTER ELEMENT LOCATION

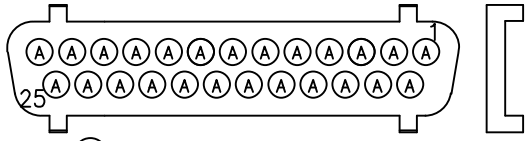

(A) = 51F820–601

SOCKET VIEW

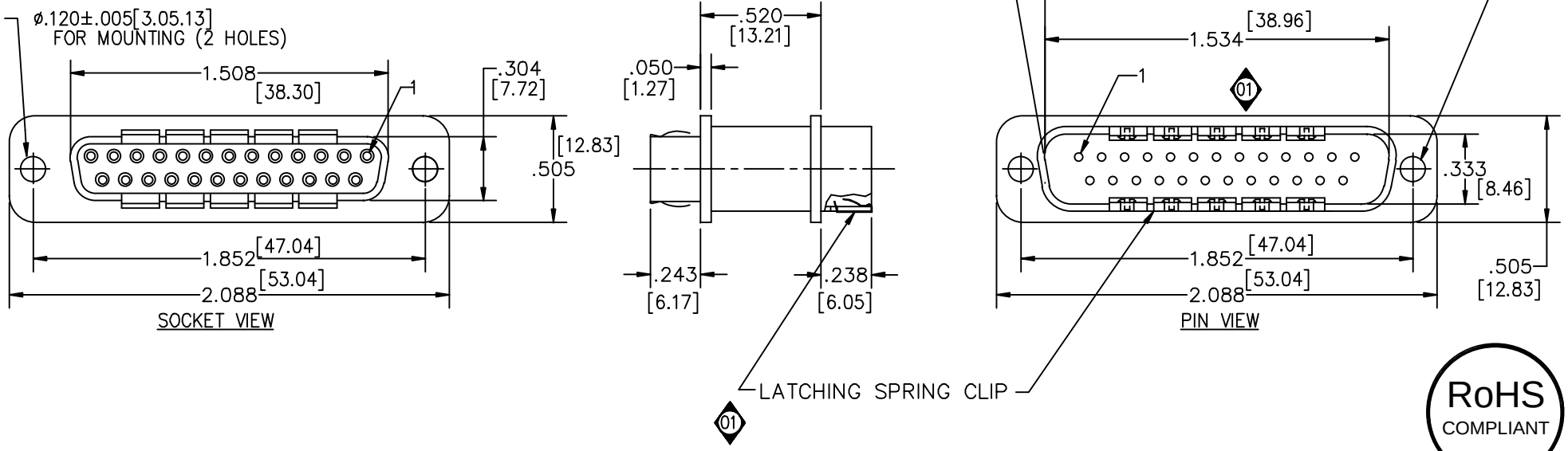

RoHS COMPLIANT

REV. NO.	CHANGE NOTICE
0	CN 28119–CPD
1	CN #17212

UNLESS OTHERWISE SPECIFIED DIMENSIONS ARE IN INCHES & (mm).
CAD SCALE: FULL

THIRD ANGLE PROJECTION

TOLERANCES UNLESS OTHERWISE SPECIFIED
Fractions ± 1/64
Dec. .xx± .010
Dec. .xxx± .015
Angles ±0° 30'

CODE IDENT. NO. OLSP2

api technologies corp.

FAIRVIEW PENNSYLVANIA

Dwn. W. SUROVIEC
Date 12–15–15
Engr. McALEVY
Sheet 1 of 1

Description: SKT. – PIN ADAPTER, D–SUB 25L FILTERED CONNECTOR

A 56F725–001

THIS DRAWING CONTAIN PROPRIETARY INFORMATION. API TECHNOLOGIES CORP. RESERVES ALL RIGHTS. THIS DOCUMENT SHALL NOT BE REPRODUCED IN WHOLE OR IN PART FOR ANY PURPOSE.

Quality Products From The Specialists In Electro–Magnetic Compatibility