THIS COPY IS PROVIDED ON A RESTRICTED BASIS AND IS NOT TO BE USED IN ANY WAY DETRIMENTAL TO THE INTERESTS OF PANCON.

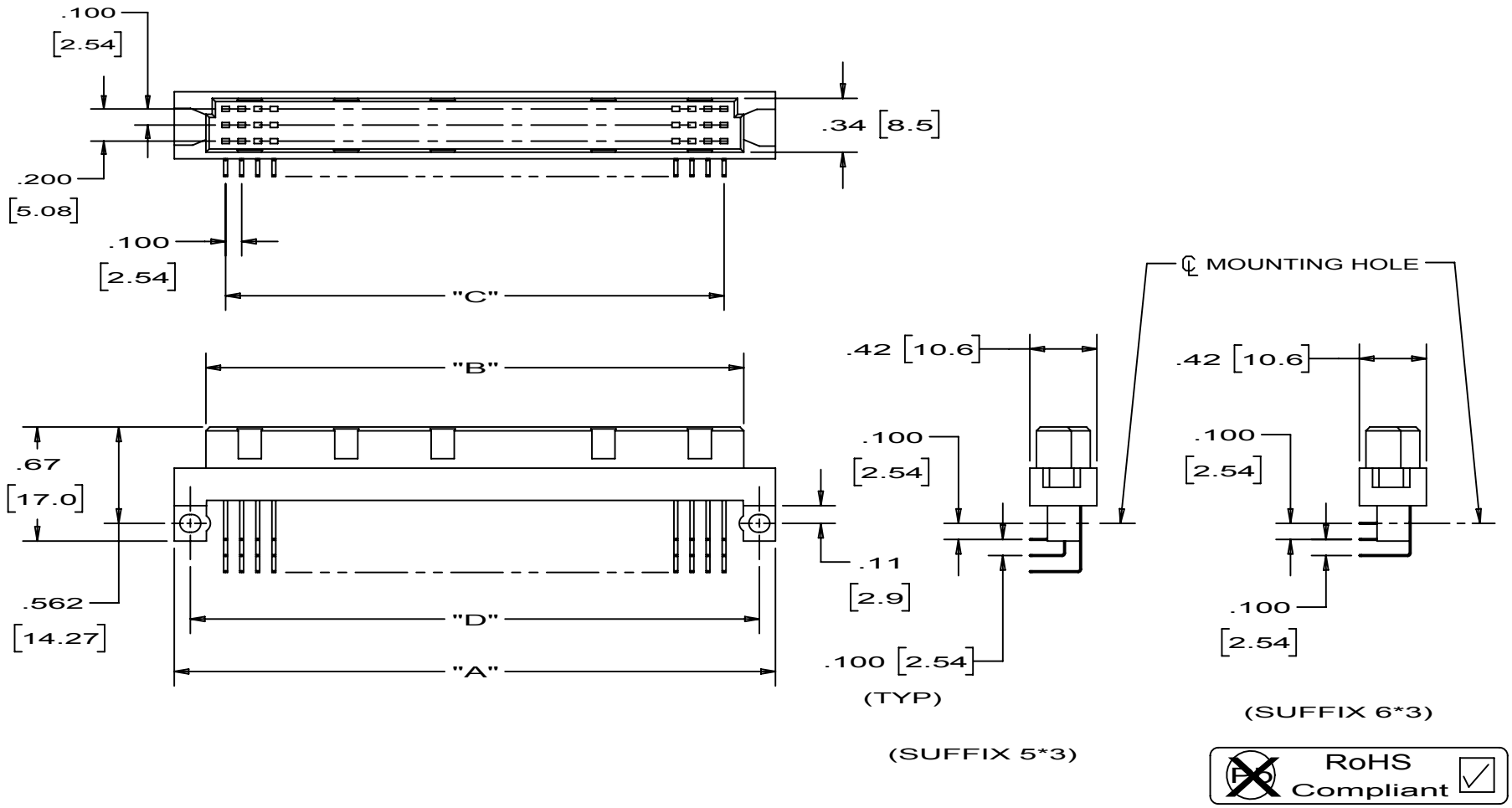

RoHS Compliant ✓

REV	DATE	BY	CHK	DESCRIPTION	CN - R	CUST	SUP
4		KI		Added RoHS Compliant	2162		

PANCON CONNECTORS
www.pancon.de / GERMANY
www.panconconnectors.com / USA

Bolingbrook, Illinois

HI-CON™, 100 SERIES
TYPE C AND 1/2 C
FEMALE CONNECTOR RIGHT ANGLE

UNLESS OTHERWISE SPECIFIED, DIMENSIONAL TOLERANCES ARE:
(.X) ± (.XXX) ±.010[.25]
(.XX) ±.02[.5] ANGLES ±

UNLESS OTHERWISE SPECIFIED, ALL DIMENSIONS ARE GIVEN IN INCHES.
THIRD ANGLE PROJECTION.

DRAWN BY: LE
MAT'L: SEE NOTES
SCALE: 1 : 1
DATE: 7-31-91
CHK'D: TOG
DRAWING NO.: KA-10425 SHT 1 OF 3
DWG. SIZE: A

THIS COPY IS PROVIDED ON A RESTRICTED BASIS AND IS NOT TO BE USED IN ANY WAY DETRIMENTAL TO THE INTERESTS OF PANCON.

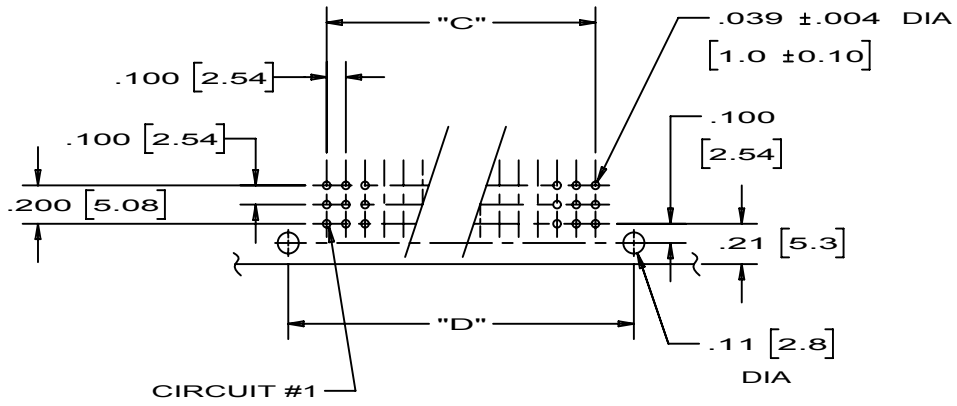

RECOMMENDED PC BOARD
LAYOUT
(SUFFIX 5*3)

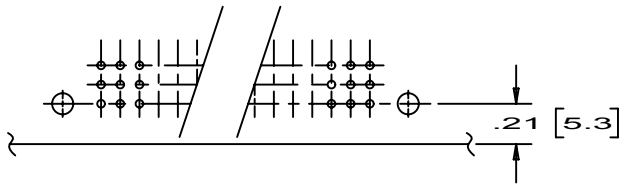

RECOMMENDED PC BOARD
LAYOUT
(SUFFIX 6*3)

RoHS Compliant

REV	DATE	BY	CHK	DESCRIPTION	CN - R	CUST	SUP
4		KI		See Sh. 1	2162		

PANCON CONNECTORS
www.pancon.de / GERMANY
www.panconconnectors.com / USA

Bolingbrook, Illinois

HI-CON™, 100 SERIES
TYPE C AND 1/2 C
FEMALE CONNECTOR RIGHT ANGLE

UNLESS OTHERWISE SPECIFIED, DIMENSIONAL TOLERANCES ARE:
(.X) ± (.XXX) ±.010[.25]
(.XX) ±.02[.5] ANGLES ±

UNLESS OTHERWISE SPECIFIED, ALL DIMENSIONS ARE GIVEN IN INCHES. THIRD ANGLE PROJECTION.

DRAWN BY: LE
MAT'L: SEE NOTES
SCALE: 1 : 1
DATE: 7-31-91
CHK'D: TOG
DRAWING NO.: KA-10425 SHT 2 OF 3
DWG. SIZE: A

THIS COPY IS PROVIDED ON A RESTRICTED BASIS AND IS NOT TO BE USED IN ANY WAY DETRIMENTAL TO THE INTERESTS OF ITW PANCON.

INSULATOR TYPE	CONTACT ARRANGEMENT			WAVE SOLDER PIN LENGTH	
	No. OF CONTACTS	ROWS EQUIPPED	POSITIONS EQUIPPED	SUFFIX 5*3	SUFFIX 6*3
C	32	A	ALL	100-132-5*3	100-132-6*3
C	32	A+C	EVEN	100-932-5*3	100-932-6*3
C	64	A+C	ALL	100-964-5*3	100-964-6*3
C	96	A+B+C	ALL	100-096-5*3	100-096-6*3
HALF C	16	A	ALL	100-316-5*3	100-316-6*3
HALF C	32	A+C	ALL	100-332-5*3	100-332-6*3
HALF C	48	A+B+C	ALL	100-348-5*3	100-348-6*3

PART NUMBER SYSTEM

100 - 096 - 5 5 3

SERIES NUMBER

CONFIGURATION (SEE TABLE)

5 = PIN ARRANGEMENT (SEE DWG)

2 = 30IN. GOLD
3 = 15IN. GOLD
5 = 8IN. GOLD

TAIL LENGTH
3=.114 [2.90]

INSULATOR TYPE	DIM "A"	DIM "B"	DIM "C"	DIM "D"
C	3.74 [95.0]	3.35 [85.0]	3.10 [78.7]	3.50 [88.9]
HALF C	2.16 [55.0]	1.75 [44.4]	1.50 [38.1]	1.90 [48.3]

NOTES:

1. CONTACT MATERIAL: COPPER ALLOY
2. HOUSING MATERIAL: GLASS FILLED POLYESTER, U.L. 94V-0
3. ALL DIMENSIONS ARE GIVEN IN INCHES AND [MILLIMETERS]

RoHS Compliant

REV	DATE	BY	CHK	DESCRIPTION	CN - R	CUST	SUP
4		KI		See Sh. 1	2162		

ITW Pancon Bolingbrook, Illinois

HI-CON™, 100 SERIES
TYPE C AND 1/2 C
FEMALE CONNECTOR RIGHT ANGLE

UNLESS OTHERWISE SPECIFIED, DIMENSIONAL TOLERANCES ARE:
(.X) ± (.XXX) ±.010[.25]
(.XX) ±.02[.5] ANGLES ±

UNLESS OTHERWISE SPECIFIED, ALL DIMENSIONS ARE GIVEN IN INCHES. THIRD ANGLE PROJECTION.

DRAWN BY: LE
MAT'L: SEE NOTES
SCALE: 1 : 1
DATE: 7-31-91
DRAWING NO.: KA-10425 SHT 3 OF 3
DWG. SIZE: A
CHK'D: TOG