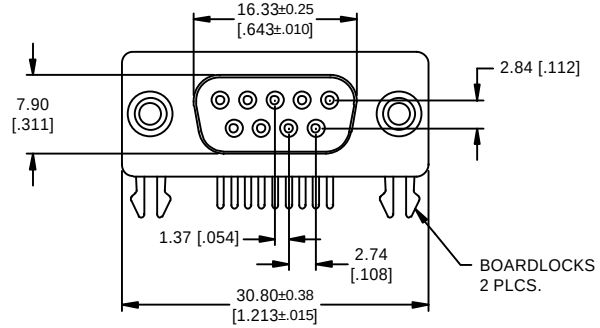

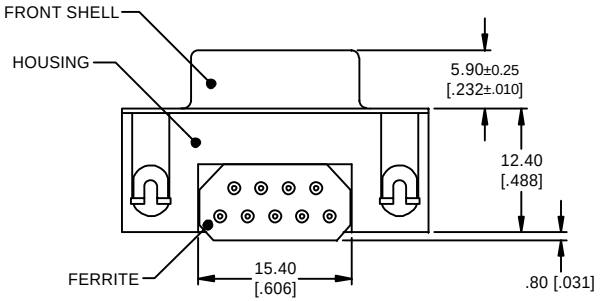

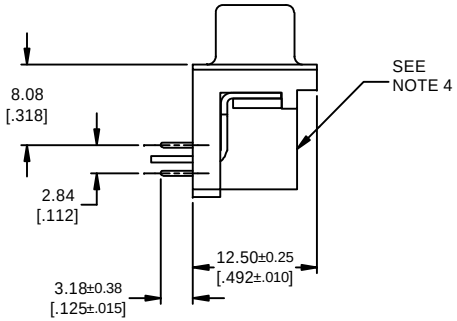

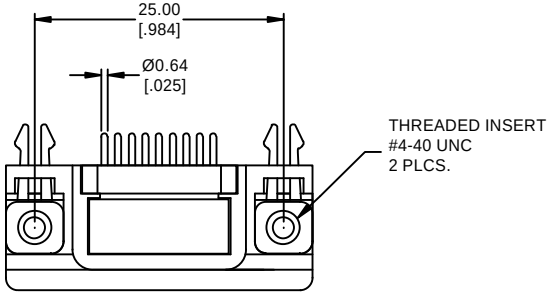

NOTES:

1. MATERIAL
   - HOUSING : PBT, GLASS FILLED, UL RATED 94V-0, BLACK
   - FRONT SHELL: CARBON STEEL
   - CONTACTS, BOARDLOCKS AND INSERTS: BRASS
2. FINISH
   - FRONT SHELL: TIN PLATED.
   - CONTACTS: GOLD FLASH IN MATING AREA OVER 2.54 um [.000100] MIN NICKEL ON ENTIRE CONTACT AREA. TIN PLATING ON SOLDER TAILS,
   - BOARDLOCKS AND INSERTS: TIN PLATED
3. ELECTRICAL SPECIFICATION:
   - 17-30 OHMS AT 30 MHz. TYP.
   - 22-37 OHMS AT 50 MHz. TYP.
   - 29-40 OHMS AT 100 MHz. TYP.
4. SCI, 56F404-001 AND DATE CODE MARKED ON THIS SURFACE.

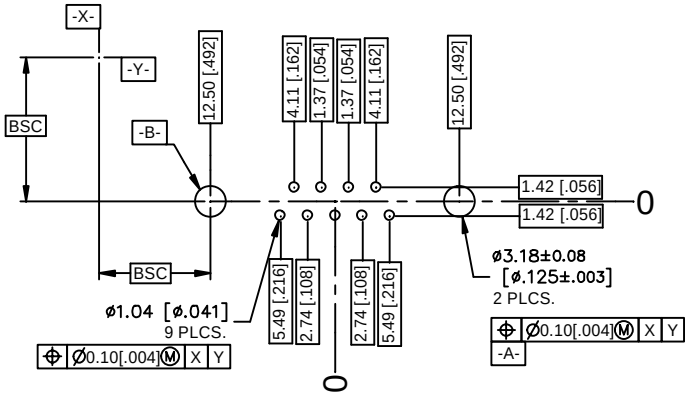

P.C. BOARD MOUNTING DIMENSIONS

RoHS COMPLIANT

REV. NO.	CHANGE NOTICE
03	CN 34787-CPD
02	CN 30315-CPD
01	CN 29381-CPD
00	CN 17537-CPD

UNLESS OTHERWISE SPECIFIED DIMENSIONS ARE IN MILLIMETERS. [INCHES] DO NOT SCALE.

THIRD ANGLE PROJECTION

TOLERANCES UNLESS OTHERWISE SPECIFIED
Dec. .x ± 0.3 [.012]
Dec. .xx ± 0.13 [.005]
Dec. .xxx ±
Angles ±

CODE IDENT. NO. 0LSP2

SPECTRUM CONTROL INC.

FAIRVIEW PENNSYLVANIA

Dwn. P. Wells
Date 05-16-07
Engr. D. Henry
Sheet 1 of 1

RECEPTACLE ASSEMBLY
9 POSITION, RIGHT ANGLE

56F404-001

Quality Products From The Specialists In Electro—Magnetic Compatibility