THIS DRAWING IS UNPUBLISHED. RELEASED FOR PUBLICATION -,- .
© COPYRIGHT - BY TYCO ELECTRONICS CORPORATION. ALL INTERNATIONAL RIGHTS RESERVED.

LOC	DIST
G	14

REVISIONS

P	LTR	DESCRIPTION	DATE	DWN	APVD
	E1	REVISED PER ECO-10-025937	21DEC10	HMR	DR

△1 STAMP AMP 22-18* APPROX AS SHOWN

2 WIRE INSULATION .170 DIA MAX.

△3 PRELIMINARY - NOT FOR PRODUCTION

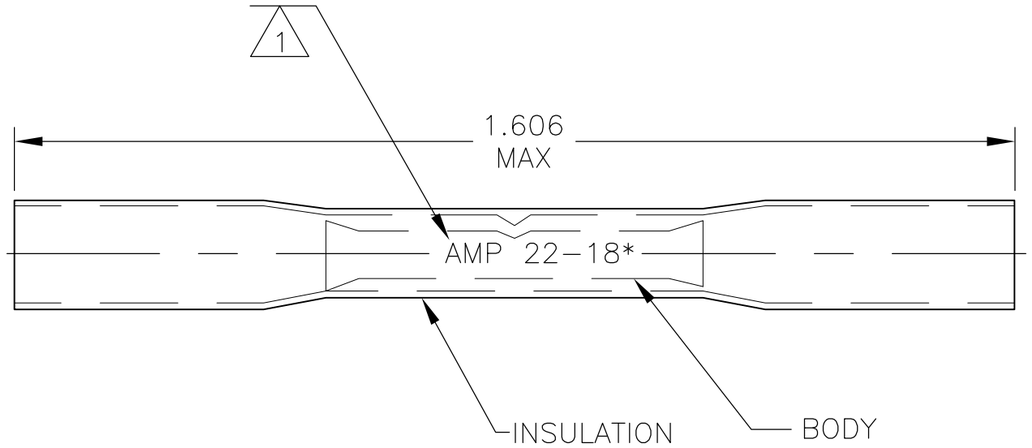

AMP
WIRE RANGE

22-18 AWG
STRANDED

2500	ON TAPE, REEL	△3 2-55824-1
50	LOOSE PIECE	8-55824-2
1000	LOOSE PIECE	55824-1
QTY	PACKAGE TYPE	PART NO

AMP INCORPORATED
CUSTOMER SERVICE SYSTEMS

FOR ADDITIONAL PRODUCT INFORMATION OR COPIES OF DRAWINGS AND TECHNICAL DOCUMENTS	PRODUCT INFORMATION CENTER 1-800-522-6752
FOR APPLICATION TOOLING INFORMATION	TOOLING ASSISTANCE CENTER 1-800-722-1111
FOR ORDER ENTRY	1-800-526-5142

THIS DRAWING IS A CONTROLLED DOCUMENT FOR AMP INCORPORATED. IT IS SUBJECT TO CHANGE AND THE CONTROLLING ENGINEERING ORGANIZATION SHOULD BE CONTACTED FOR THE LATEST REVISION.

MAX RECOMMENDED OPERATING TEMPERATURE: 125° C MAX

VOLTAGE RATING: 600V MAX (BUILDING WIRING) 1000V MAX (FIXTURES & SIGNS)

CIRCULAR MIL AREA: 0.26-0.96mm² [509-1900] STRANDED

THIS DRAWING IS A CONTROLLED DOCUMENT.

DIMENSIONS: INCHES

TOLERANCES UNLESS OTHERWISE SPECIFIED:

0 PLC	± -
1 PLC	± -
2 PLC	± .008
3 PLC	± -
4 PLC	± -
ANGLES	± -

MATERIAL: BODY: ETP COPPER INSULATION:-POLYOLEFIN COLOR: RED

FINISH: EDP TIN PLATED

DWN	S S GOULDEN	6/93
CHK	R HERSEY	6/93
APVD	B BARE	6/93
PRODUCT SPEC	—	
APPLICATION SPEC	408-4022	
WEIGHT	—	

Tyco Electronics
Tyco Electronics Corporation
Harrisburg, PA 17105-3608

NAME: SPLICE, SEALABLE HEAT SHRINKABLE —

SIZE	CAGE CODE	DRAWING NO	RESTRICTED TO
A3	00779	C-55824	—

CUSTOMER DRAWING | SCALE NTS | SHEET 1 OF 1 | REV E1

1470-19 (1/08)