## Inlet nozzle for centrifugal fan and splash proof centrifugal fan

Nozzle mounted in fan inlet side to adjust the flow of introduced air. Material: Steel sheet

**Dimensions**(Unit : mm)

**$\phi$150mm type**

Model : 109-1081 Surface treatment : Electro nickel plating (silver) Color
: 109-1081H : Cation electropainting (black)

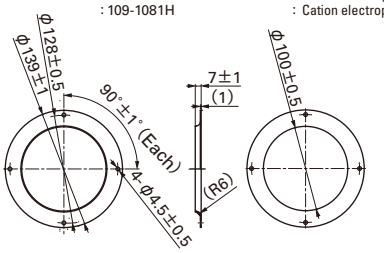

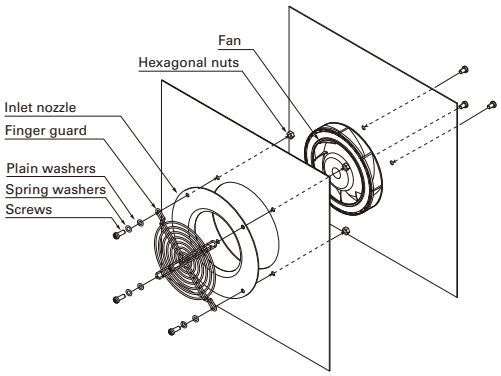
Centrifugal fan