M-5901 | 1

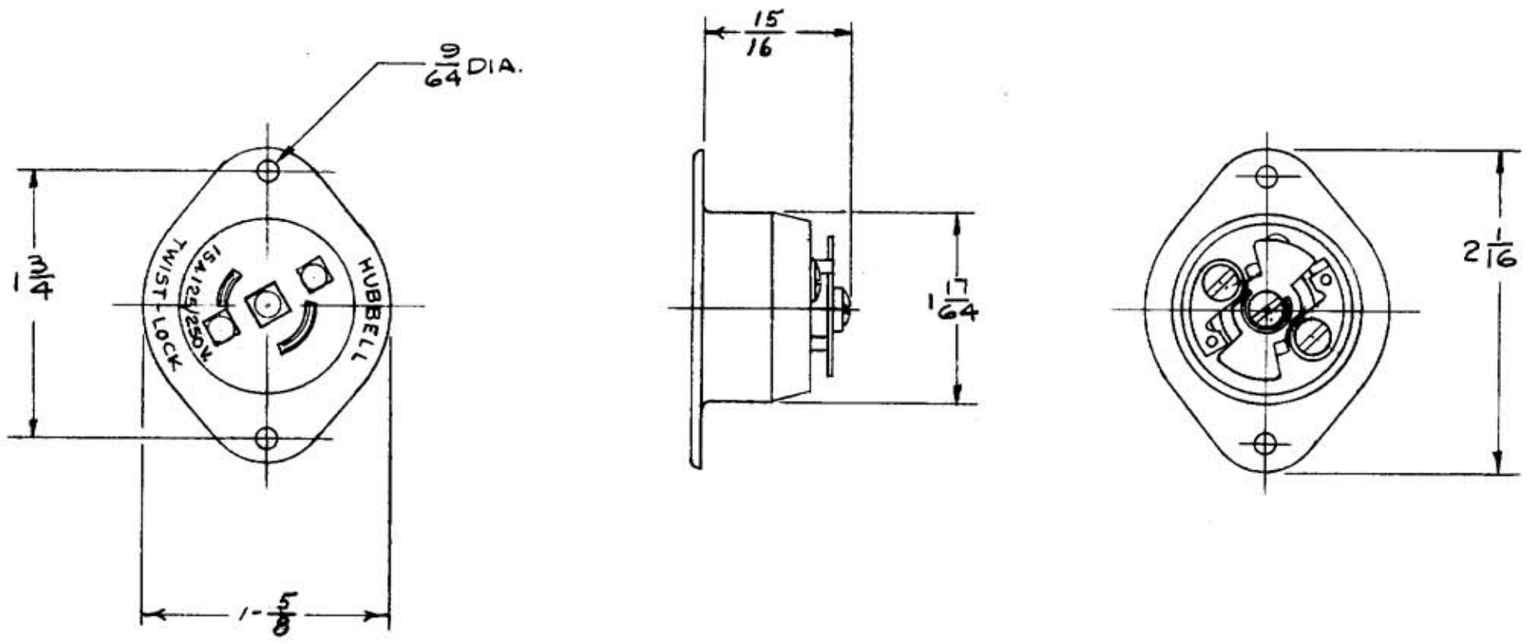

LIST OF PARTS

DESCRIPTION	MATERIAL	FINISH
BASE	NYLON	BLACK
CONTACT BLADE	BRASS	
INSERT	BRASS	
BIND. HD. SCREW	BRASS	1-WHITE
INSULATOR	NYLON	NATURAL
CUPPED CONT. WASHER	BRASS	NICKEL

SYM	REVISIONS	APP	DATE
1	SQUARE INSERTS WERE HEX; 15/16 DIM WAS 1"; ADDED 1-5/8 DIM. JAC	CB	2/14/92

DIMENSION SHEET FOR CAT. NO. 7486 N

REPAIRABLE ☐ NON-REPAIRABLE ☒

B

M-5901

TITLE
15A. 125/250V. 3-WIRE MIDGET
TWIST-LOCK FLANGED INLET
(NYLON)

TOLERANCES UNLESS OTHERWISE SPECIFIED
FRACTIONS ± 1/64
DECIMALS ± .005
ANGLES ± 2°

HARVEY HUBBELL, INC.
BRIDGEPORT, CONN.

DR. BY A.J.L. APP. BY
TR. BY SCALE FULL
CHK'D. BY DATE 6-8-76

1

CODE 74545