Inlet nozzle for centrifugal fan and splash proof centrifugal fan

Nozzle mounted in fan inlet side to adjust the flow of introduced air. Material: Steel sheet

Dimensions(Unit : mm)

$^{\phi}$175mm type

Model : 109-1073 Surface treatment : Electro nickel plating (silver) Color
: 109-1073H : Cation electropainting (black)

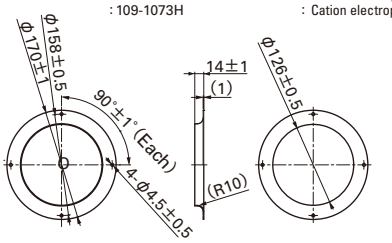
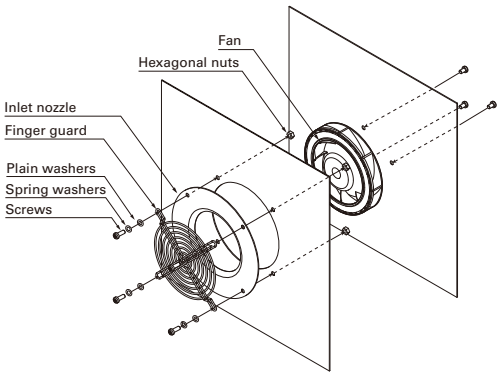
Centrifugal fan