M-8511 | 1

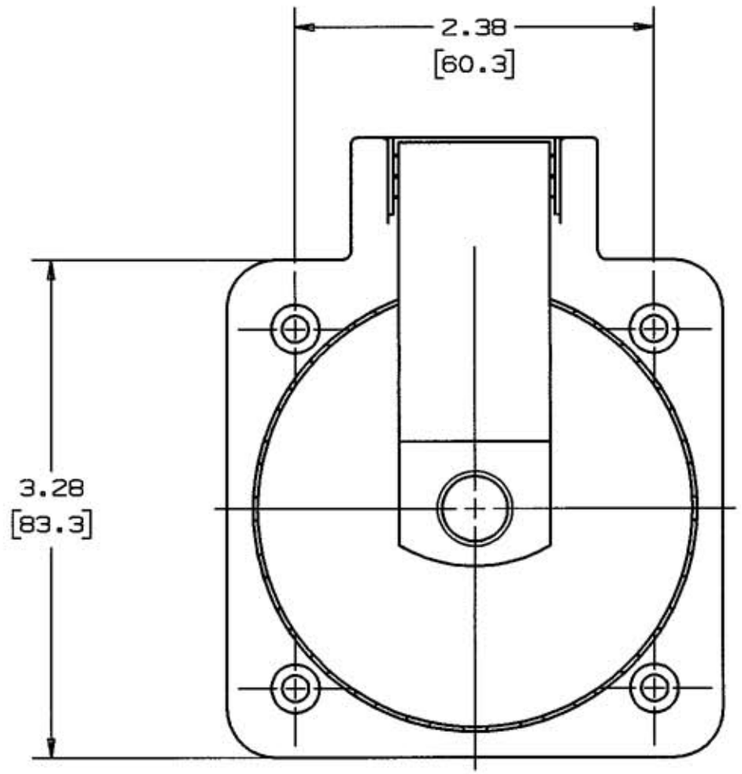

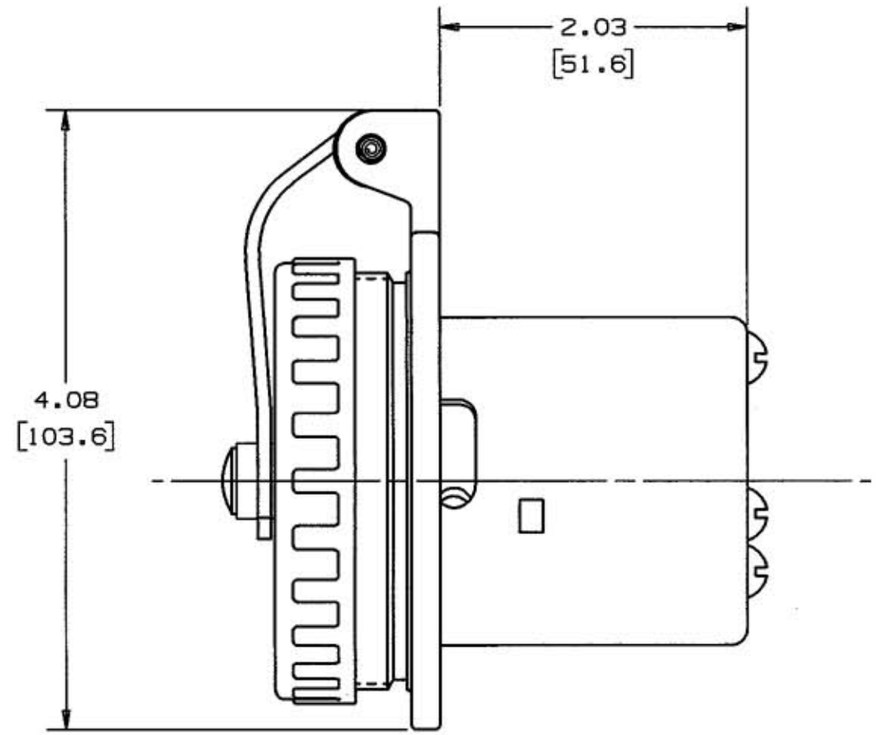

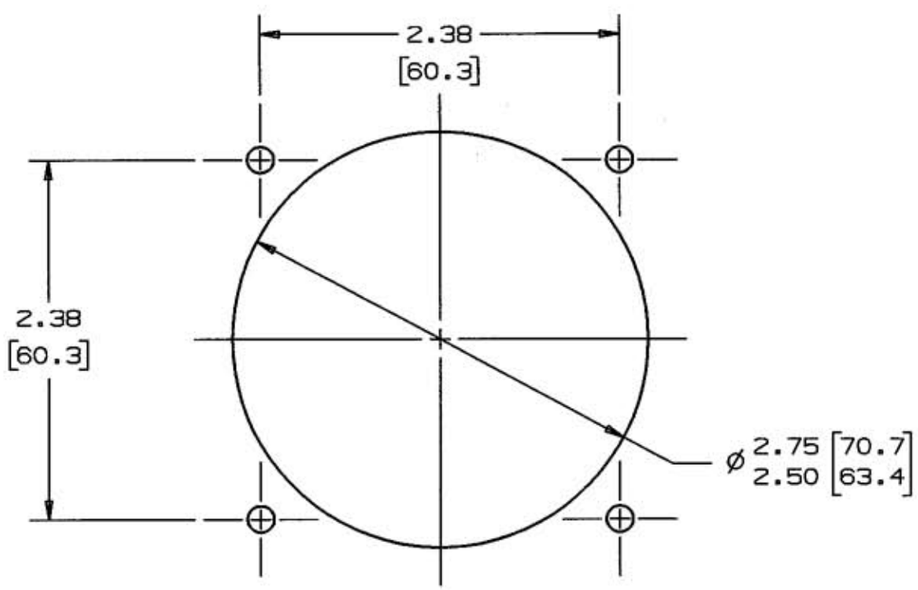

CUTOUT OPENING

CATALOG NUMBER	AMPERAGE	VOLTAGE
HBL503SS	50A	125V
HBL504SS	50A	125/250V

NOTES: (UNLESS OTHERWISE SPECIFIED)

1) DIMENSION FORMAT IS: INCHES [mm]

2) DIMENSIONS SHOWN ON THIS DRAWING ARE NOMINAL VALUES FOR GENERAL USE ONLY. ACTUAL PART TOLERANCES MUST BE OBTAINED FROM HUBBELL ENGINEERING.

LIST OF PARTS

DESCRIPTION	MATERIAL	FINISH
INLET COVER & FLANGE ASSY	ST. STEEL	
INTERIOR	DUREZ	
BLADES	BRASS	NICKEL PLATE
INTERIOR SCREWS	ST. STEEL	
MOUNTING SCREWS	BRASS	CHROME
STRAIN RELIEF	NYLON	
STRAIN RELIEF SCREWS	ST. STEEL	
GASKETS	NEOPRENE	

SYM	REVISIONS	APP	DATE
1	X REMOVED; LAST X-REVISION WAS X-0. RELEASED FOR PRODUCTION PER DCN #8674. JMN	TCM	8/16/01

THE DESIGN AND DIMENSIONS OF THE PRODUCT SHOWN ON THIS DRAWING ARE SUBJECT TO CHANGE WITHOUT NOTICE

TITLE STAINLESS STEEL SHORE POWER INLET

TOLERANCES UNLESS OTHERWISE SPECIFIED
FRACTIONS ±1/64
DECIMALS ±.005
ANGLES ±2°

WIRING DEVICE-KELLEMS
HUBBELL INCORPORATED
BRIDGEPORT, CT

DR. BY JMN | APP. BY JNC
TR. BY | SCALE 1:1
CHK'D BY TCM | DATE 8/16/01

DIMENSION SHEET FOR CAT. NO. SEE TABLE

REPAIRABLE ☐ NON-REPAIRABLE ☒

B

M-8511 C 1

CODE 74545