Aug.1.2016 Copyright 2016 HIROSE ELECTRIC CO., LTD. All Rights Reserved.

| | COUNT | DESCRIPTION OF REVISIONS | BY | CHKD | DATE | | COUNT | DESCRIPTION OF REVISIONS | BY | CHKD | DATE |
|---|---|---|---|---|---|---|---|---|---|---|---|
| 1 | 16 | RE-H-03128(C) | S.H | K.A | 99. 5.31 | | | | | | . . |
| | | | | | . . | | | | | | . . |
| | | | | | . . | | | | | | . . |

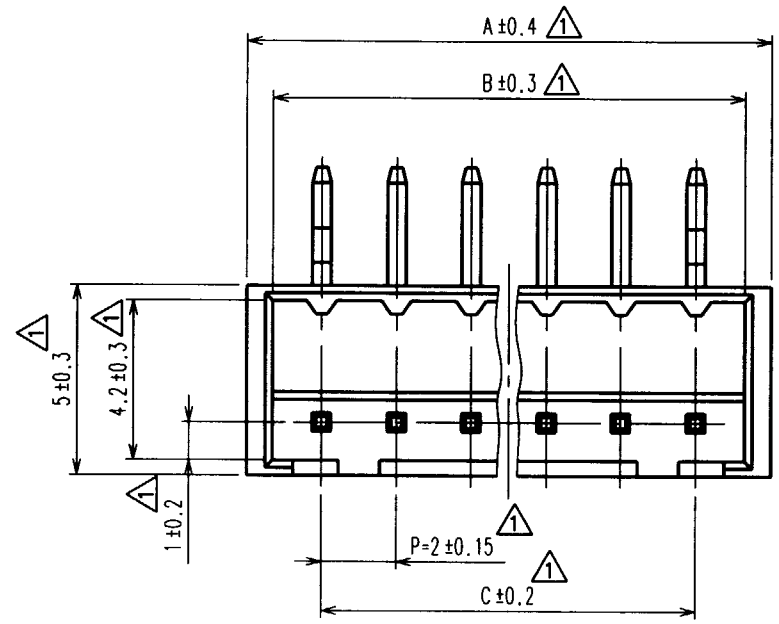


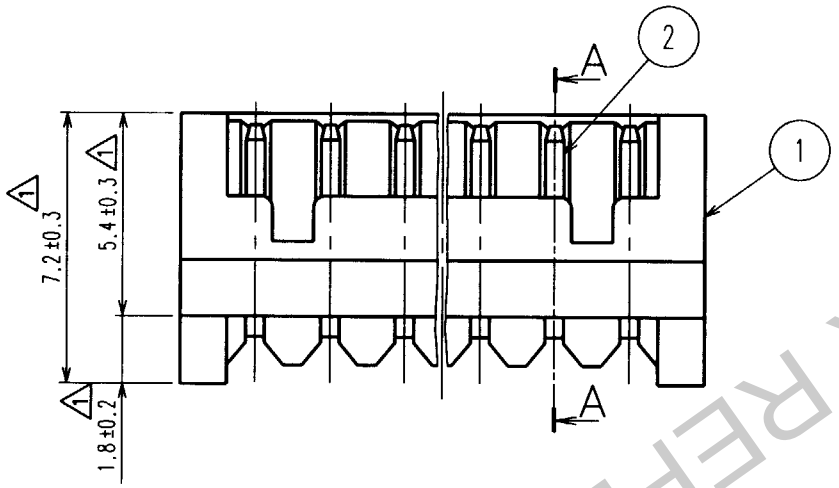


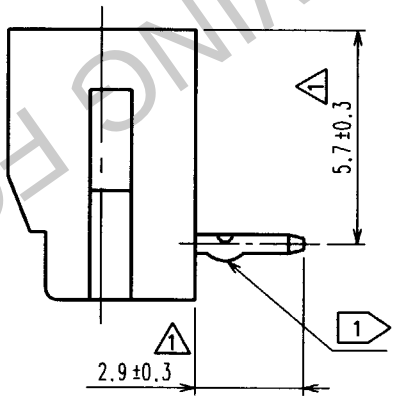


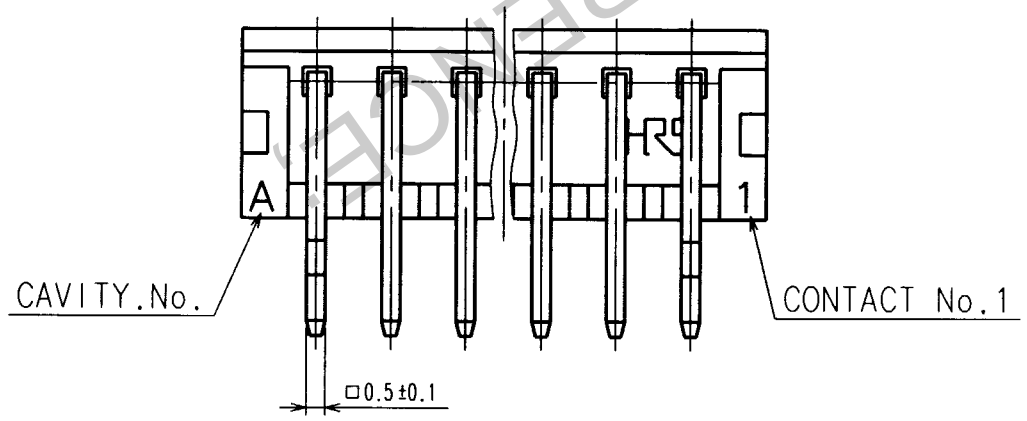


A-A

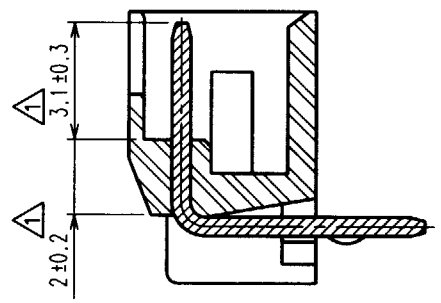


RECOMMENDED PATTERN 1

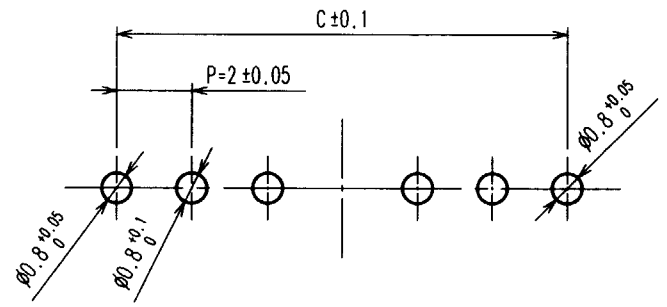


| HRA NO. | PART NO. | NUMBER OF CONTACT | A | B | C |
|---|---|---|---|---|---|
| CL543-0179-4 | DF3A- 2P-2DS | 2 | 6.0 | 4.6 | 2.0 |
| CL543-0180-3 | DF3A- 3P-2DS | 3 | 8.0 | 6.6 | 4.0 |
| CL543-0181-6 | DF3A- 4P-2DS | 4 | 10.0 | 8.6 | 6.0 |
| CL543-0182-9 | DF3A- 5P-2DS | 5 | 12.0 | 10.6 | 8.0 |
| CL543-0183-1 | DF3A- 6P-2DS | 6 | 14.0 | 12.6 | 10.0 |
| CL543-0184-4 | DF3A- 7P-2DS | 7 | 16.0 | 14.6 | 12.0 |
| CL543-0185-7 | DF3A- 8P-2DS | 8 | 18.0 | 16.6 | 14.0 |
| CL543-0186-0 | DF3A- 9P-2DS | 9 | 20.0 | 18.6 | 16.0 |
| CL543-0187-2 | DF3A-10P-2DS | 10 | 22.0 | 20.6 | 18.0 |
| CL543-0188-5 | DF3A-11P-2DS | 11 | 24.0 | 22.6 | 20.0 |
| CL543-0189-8 | DF3A-12P-2DS | 12 | 26.0 | 24.6 | 22.0 |
| CL543-0190-7 | DF3A-13P-2DS | 13 | 28.0 | 26.6 | 24.0 |
| CL543-0191-0 | DF3A-14P-2DS | 14 | 30.0 | 28.6 | 26.0 |
| CL543-0192-2 | DF3A-15P-2DS | 15 | 32.0 | 30.6 | 28.0 |

1 NOTES 1 :No.1 AND * CONTACT SHALL BE PROCESSED KINK.(*=2-15)

| NO. | MATERIAL | FINISH, REMARKS | NO. | MATERIAL | FINISH, REMARKS |
|---|---|---|---|---|---|
| 1 | POLYAMIDE | BLACK,UL94V-0 | 2 | BRASS | TIN PLATING |

| CODE NO.(OLD) | DRAWN | DESIGNED | CHECKED | APPROVED | RELEASED |
|---|---|---|---|---|---|
| | H.Igarashi '94. 3. 29 | H.Igarashi '94. 3. 29 | T.Oma '94. 3. 29 | M.Yamamoto '94. 3. 29 | . . |

SCALE 5 : 1
UNITS mm

DRAWING NO. EDC3-160110-01

HRS HIROSE ELECTRIC CO., LTD

PART NO. DF3A-*P-2DS

CODE NO. CL543

1/1

TO

FOR REFERENCE ONLY