Aug.1.2016 Copyright 2016 HIROSE ELECTRIC CO., LTD. All Rights Reserved.

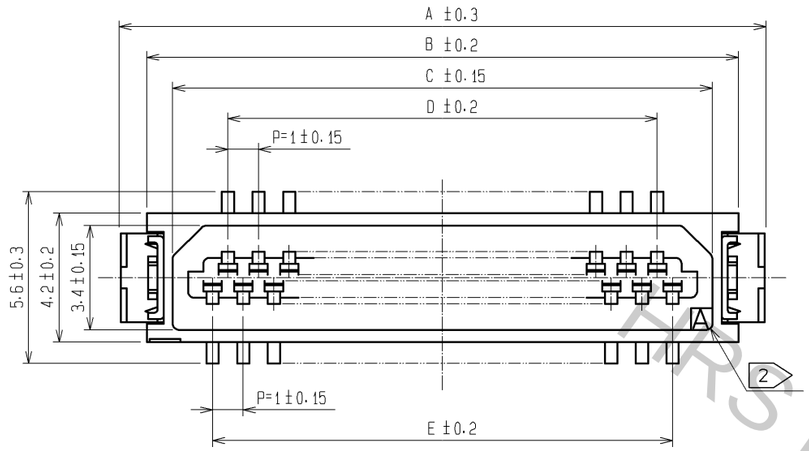

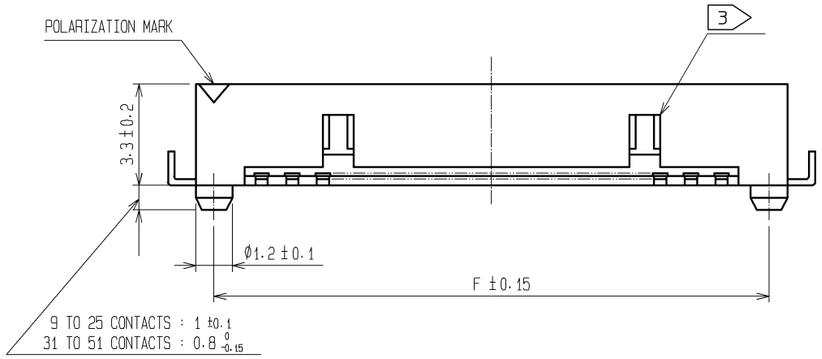

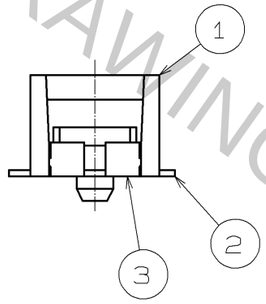

RECOMMENDED PATTERN

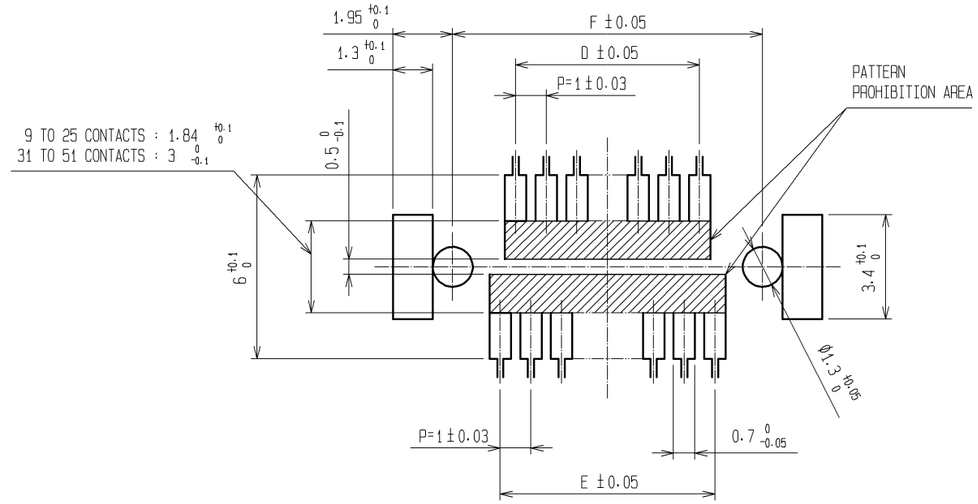

PART No.	CODE No.	NUMBER OF CONTACTS	A	B	C	D	E	F
DF9- 9P-1V(69)	CL540-0066-9-69	9	10.1	8.3	6.6	3	4	7.1
DF9-11P-1V(69)	CL540-0067-1-69	11	11.1	9.3	7.6	4	5	8.1
DF9-13P-1V(69)	CL540-0068-4-69	13	12.1	10.3	8.6	5	6	9.1
DF9-15P-1V(69)	CL540-0069-7-69	15	13.1	11.3	9.6	6	7	10.1
DF9-17P-1V(69)	CL540-0070-6-69	17	14.1	12.3	10.6	7	8	11.1
DF9-19P-1V(69)	CL540-0071-9-69	19	15.1	13.3	11.6	8	9	12.1
DF9-21P-1V(69)	CL540-0072-1-69	21	16.1	14.3	12.6	9	10	13.1
DF9-23P-1V(69)	CL540-0073-4-69	23	17.1	15.3	13.6	10	11	14.1
DF9-25P-1V(69)	CL540-0074-7-69	25	18.1	16.3	14.6	11	12	15.1
DF9-31P-1V(69)	CL540-0075-0-69	31	21.1	19.3	17.6	14	15	18.1
DF9-41P-1V(69)	CL540-0214-4-69	41	26.1	24.3	22.6	19	20	23.1
DF9-51P-1V(69)	CL540-0088-1-69	51	31.1	29.3	27.6	24	25	28.1

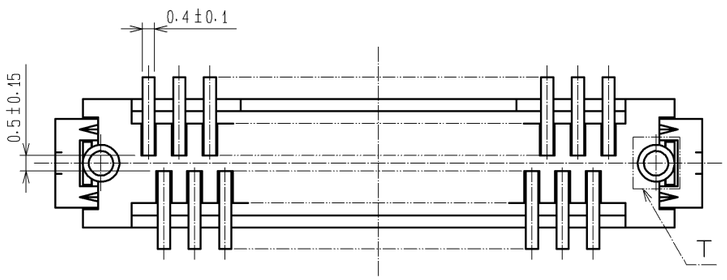

T(10:1)

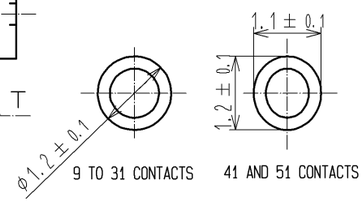

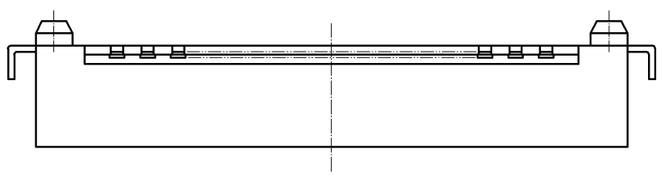

NOTES 1 : LEAD CO-PLANARITY INCLUDE REINFORCED METAL FITTINGS SHALL BE 0.1mm MAX.
2 HRS MARK AND CAV NO. ARE INDICATED IN APPROX POSITION SHOWN.
3 9 TO 25 CONTACT CONNECTORS HAVE ONE LOCK AT CENTER OF HOUSING.
31 TO 51 CONTACT CONNECTORS HAVE TWO LOCKS AS PER DRAWING.

NO.	MATERIAL	FINISH , REMARKS	NO.	MATERIAL	FINISH , REMARKS
3	BRASS	SURFACE:TIN PLATED(REFLOW FINISH)1μm min UNDER PLATING:COPPER 0.3μm min	8	PS	REINFORCEMENT COLLAR
2	PHOSPHOR BRONZE	CONTACT AREA:GOLD PLATED 0.2μm min LEAD AREA:TIN PLATED 1μm min UNDER PLATING:NICKEL 0.3μm min	7	PS	BLACK(PLASTIC REEL)
			6	POLYIMIDE	BROWN(HEAT-RESISTANCE TAPE)
			5	POLYESTER	CLEAR(COVER TAPE)
1	POLYAMIDE	BEIGE. UL94V-0	4	PS	CLEAR(EMBOSSED CARRIER TAPE)

UNITS	SCALE	COUNT	DESCRIPTION OF REVISIONS	DESIGNED	CHECKED	DATE
mm	5 : 1					

HRS HIROSE ELECTRIC CO., LTD.

APPROVED	: KH. IKEDA	12.01.16	DRAWING NO.	EDC3-341298-02
CHECKED	: AR. TAKAHASHI	12.01.16	PART NO.	DF9-*P-1V(69)
DESIGNED	: SH. HOSODA	12.01.16	CODE NO.	CL540-
DRAWN	: KR. AJITO	12.01.16		1/2

HRS DRAWING FOR REFERENCE ONLY

Aug.1.2016 Copyright 2016 HIROSE ELECTRIC CO., LTD. All Rights Reserved.

エンボスキャリアテープ（3：1）

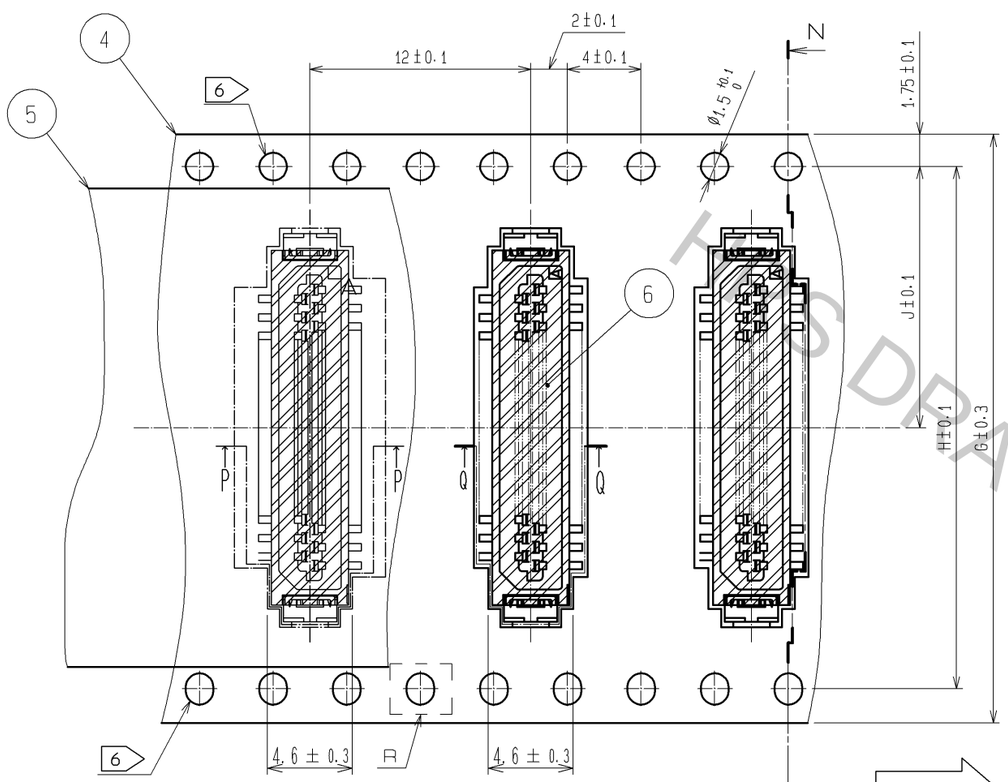

N-N（3：1）

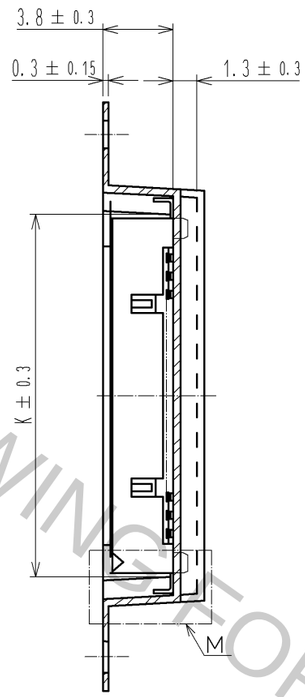

STYLE AND DIMENSION OF REEL (FREE)

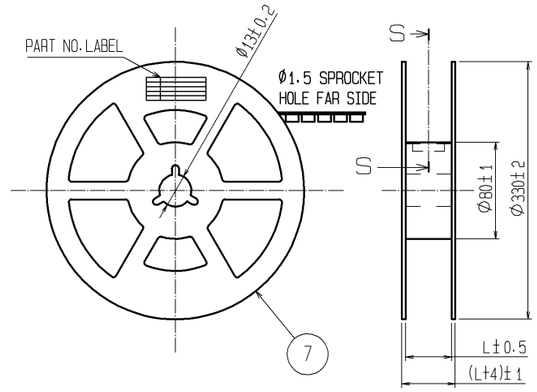

PART No.	CODE No.	NUMBER OF CONTACTS	G	H	J	K	L
DF9- 9P-1V(69)	CL540-0066-9-69	9	24	—	11.5	8.7	25.5
DF9-11P-1V(69)	CL540-0067-1-69	11	24	—	11.5	9.7	25.5
DF9-13P-1V(69)	CL540-0068-4-69	13	24	—	11.5	10.7	25.5
DF9-15P-1V(69)	CL540-0069-7-69	15	24	—	11.5	11.7	25.5
DF9-17P-1V(69)	CL540-0070-6-69	17	24	—	11.5	12.7	25.5
DF9-19P-1V(69)	CL540-0071-9-69	19	24	—	11.5	13.7	25.5
DF9-21P-1V(69)	CL540-0072-1-69	21	24	—	11.5	14.7	25.5
DF9-23P-1V(69)	CL540-0073-4-69	23	32	28.4	14.2	15.7	33.5
DF9-25P-1V(69)	CL540-0074-7-69	25	32	28.4	14.2	16.7	33.5
DF9-31P-1V(69)	CL540-0075-0-69	31	32	28.4	14.2	19.7	33.5
DF9-41P-1V(69)	CL540-0214-4-69	41	44	40.4	20.2	24.7	45.5
DF9-51P-1V(69)	CL540-0088-1-69	51	44	40.4	20.2	29.7	45.5

DIRECTION OF UNREELING

P-P(3:1)　Q-Q(3:1)

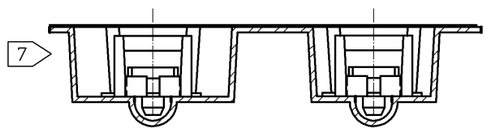

M（10：1）

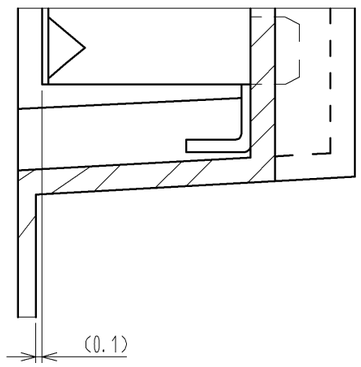

S-S（FREE）

NOTES 4 : 1 REEL 1000 CONNECTORS.
5 : AT THE BEIGINNING OF THE REEL,
30 COMPONENTS SHALL BE EMPTY.
AT THE END OF THE REEL,
20 COMPONENTS SHALL BE EMPTY.
6 LET THE SENDING HOLE OF 9 TO 21 CONTACTS
BE ONLY THE UPPER ONE SIDE TOWARD A DRAWING.
THE SENDING HOLE OF 23 OR MORE CONTACTS
IS ESTABLISHED IN BOTH SIDES, AS SHOWN IN A FIGURE.
7 A POCKET SHAPE IS DIFFERET AT INTERVALS OF EACH
CAVITY NUMBER TO AVOID OVERLAP.
8 : PEEL FORCE REFERS TO JIS C 0806.
9 AFTER PACKING, ROLL 2 METERS OF THE REINFORCEMENT
COLLAR TO OUTER CIRCUMFERENCE OF TAPE AND REEL
POCKET, AND TAPE DOWN AT THE END THE COLLAR.

R（10：1）

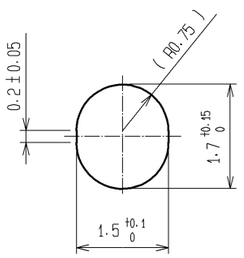

DETAIL OF PART NO. LABEL

SUPPLIER
QUANTITY
PART NO.
CODE NO.
DATE OF MANUFACTURED

生産月日	年　月　日
図番	CL540-****-**-69
品名	DF9-*P-1V(69)
納入数量	1000Ko
納入者	ヒロセ電機（株）

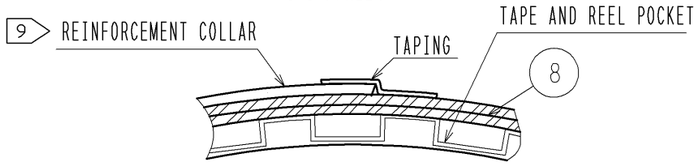

HRS	DRAWING NO.	EDC3-341298-02
	PART NO.	DF9-*P-1V(69)
	CODE NO.	CL540- △ 2/2

HRS DRAWING FOR REFERENCE ONLY