Aug.1.2016 Copyright 2016 HIROSE ELECTRIC CO., LTD. All Rights Reserved.

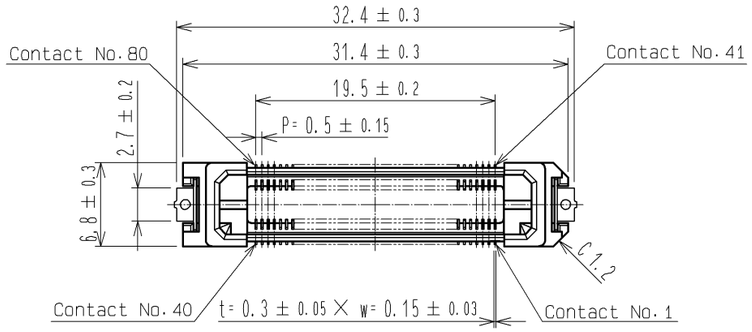

RECOMMENDED LAND PATTERN DIMENSION OF PCB

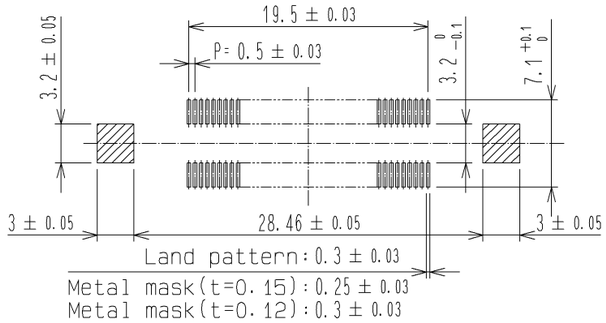

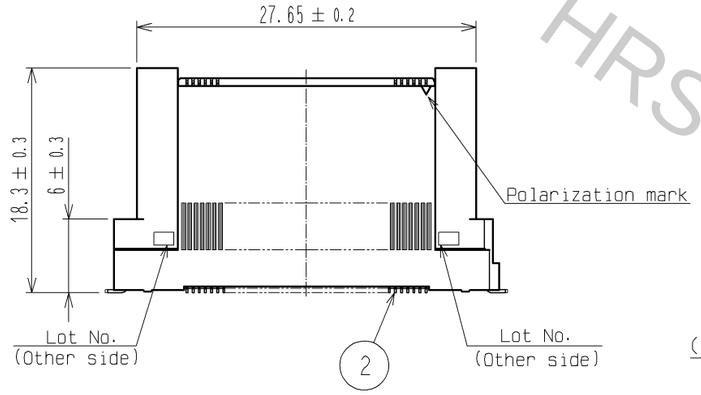

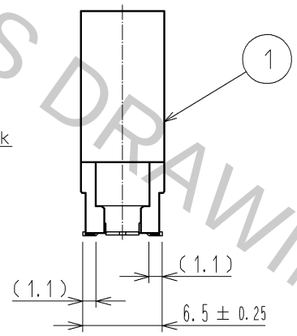

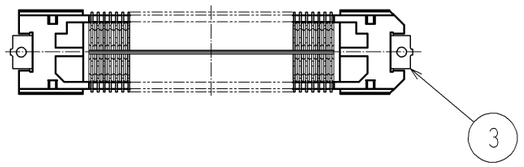

Drawing for mating
(No scale)

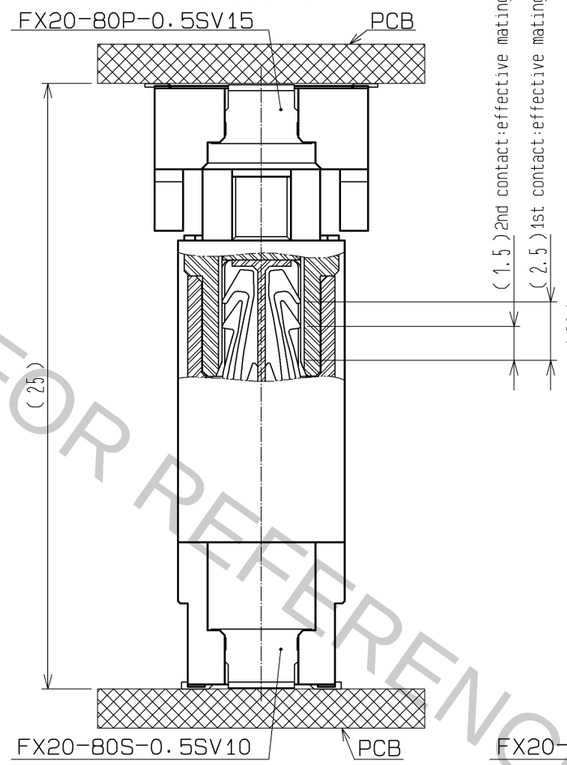

Drawing for mating
(No scale)

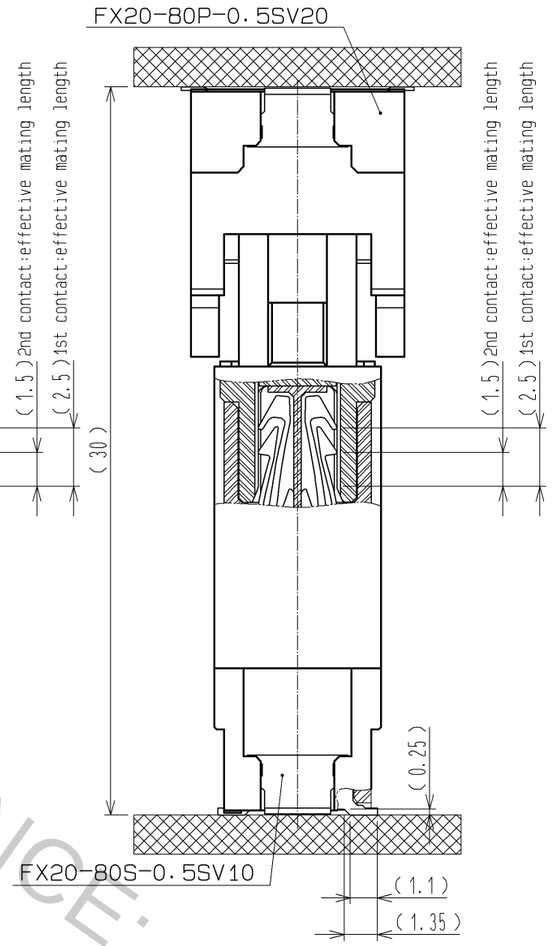

2 DRAWING FOR PACKING(No scale)

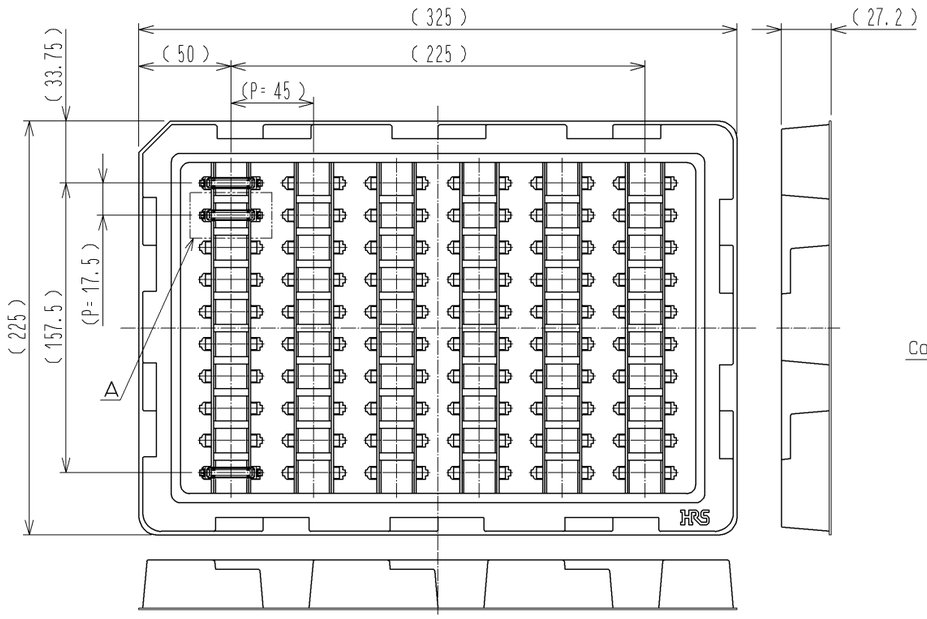

A(1:1)

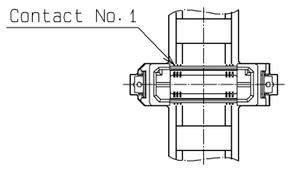

1 Lead CO-Planarity is 0.1mm MAX.
2 This is packaged in tray.(60pcs/tray)
3 Blemish and hit mark can be occured through out the manufacturing process which doesn't affect quality level.
4 Please note that excessive wrenching force could damage this connector.
Please refer to the guideline for detailed regulations of the mating method.
5 The dimensions in parentheses are for references.

NO.	MATERIAL	FINISH , REMARKS
1	LCP	BLACK UL94V-0

NO.	MATERIAL	FINISH , REMARKS
3	BRASS	TIN-PLATING 1μm
2	PHOSPHOR BRONZE	CONTACT AREA:GOLD 0.1μm LEAD AREA:GOLD 0.03μm UNDER PLATING:NICKEL 1μm

UNITS	SCALE	COUNT	DESCRIPTION OF REVISIONS	DESIGNED	CHECKED	DATE
mm	2 : 1					

HIROSE ELECTRIC CO., LTD.

APPROVED	HS. OKAWA	13.10.07	DRAWING NO.	EDC3-336346-00
CHECKED	KI. HIROKAWA	13.10.07	PART NO.	FX20-80S-0.5SV10
DESIGNED	TS. OONO	13.10.07	CODE NO.	CL570-1109-7-00
DRAWN	TS. OONO	13.10.07		1/1

HRS DRAWING FOR REFERENCE.