Aug.1.2016 Copyright 2016 HIROSE ELECTRIC CO., LTD. All Rights Reserved.

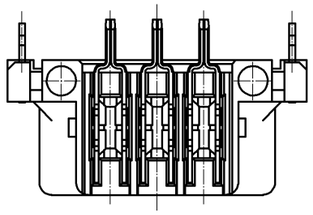

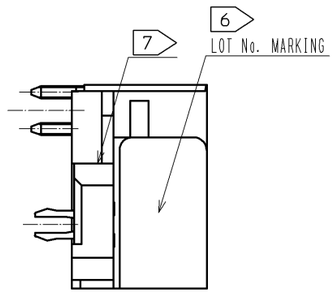

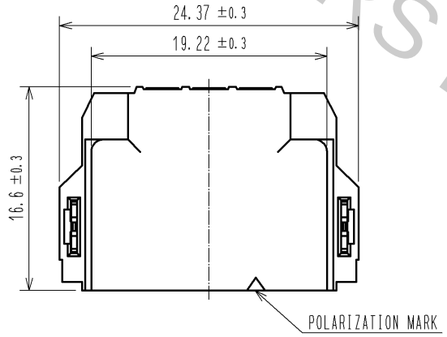

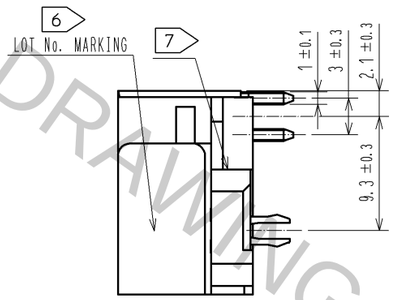

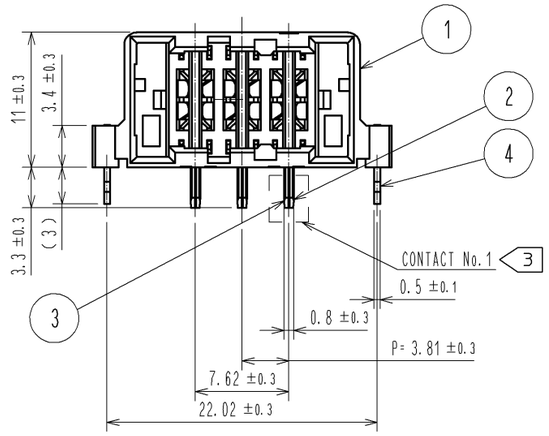

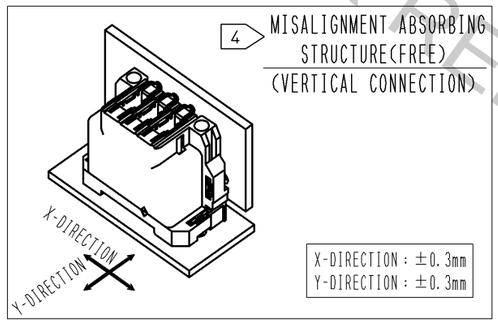

CROSS SECTION OF MATING(FREE)
VERTICAL CONNECTION

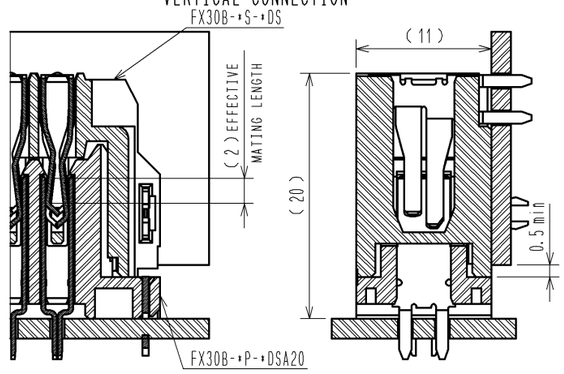

CROSS SECTION OF MATING(FREE)
COPLANAR CONNECTION

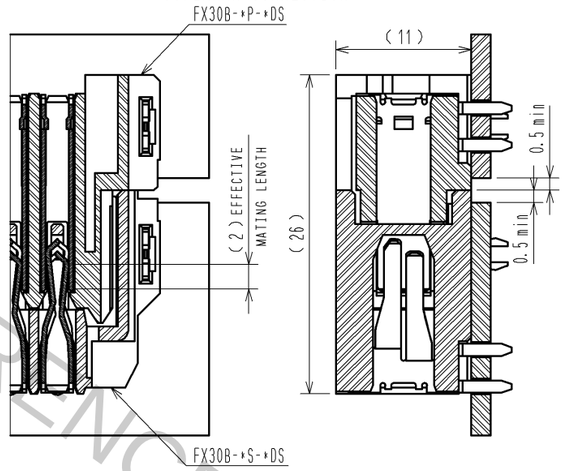

NOTE
1. THIS PRODUCT IS PACKAGED IN TRAY.(30pcs/TRAY)
2. BLEMISH AND HIT MARK CAN BE OCCURED THROUGH OUT THE MANUFACTURING PROCESS WHITCH DOSEN'T AFFECT QUALITY LEVEL. ALSO, BLACK SPOT COULD BE OBSERVED ON THE SURFACE OF HOUSING.
3. FOR THE CONTACT NO., ADJACENT TWO PAIRS OF LEADS PLACED BACK-TO-BACK (4 LEADS IN TOTAL) COMPOSE ONE LINE.
4. MISALIGNMENT ABSORBING RANGE: ±0.3mm max.
5. THE DIMENSION IN PARENTHESES ARE FOR REFERENCES.
6. LOT NO. IS INDICATED AT EITHER ONE OF THE POSITION AS SHOWN.
7. POSSIBLE SHORT SHOT AND/OR BURR AT THE INDICATED AREA DOES NOT AFFECT THE PRODUCT QUALITY.

NO.	MATERIAL	FINISH , REMARKS
2	COPPER ALLOY	CONTACT AREA:GOLD-PLATING 0.1μm LEAD AREA:TIN-PLATING 1.0μm UNDER PLATING:NICKEL 1.0μm
1	POLYAMIDE	BLACK UL94V-0

NO.	MATERIAL	FINISH , REMARKS
5	POLYSTYRENE	
4	PHOSPHOR BRONZE	TIN-PLATING 3.0μm UNDER PLATING:NICKEL 1.0μm
3	COPPER ALLOY	CONTACT AREA:GOLD-PLATING 0.1μm LEAD AREA:TIN-PLATING 1.0μm UNDER PLATING:NICKEL 1.0μm

UNITS	SCALE	COUNT	DESCRIPTION OF REVISIONS	DESIGNED	CHECKED	DATE
mm	2 : 1					

HRS HIROSE ELECTRIC CO., LTD.

APPROVED	HS. OKAWA	13. 03. 13
CHECED	KI. HIROKAWA	13. 03. 12
DESIGNED	DK. AIMOTO	13. 03. 11
DRAWN	DK. AIMOTO	13. 03. 11

DRAWING NO. EDC3-347277-00
PART NO. FX30B-3S-3.81DS
CODE NO. CL570-3601-9-00
1/2

HRS DRAWING FOR REFERENCE;

Aug.1.2016 Copyright 2016 HIROSE ELECTRIC CO., LTD. All Rights Reserved.

RECOMMENDED HOLE PATTERN DIMENSION OF PCB(5:1)
(CONNECTOR MOUNTING SIDE, PCB THICKNESS:t=1.6mm)

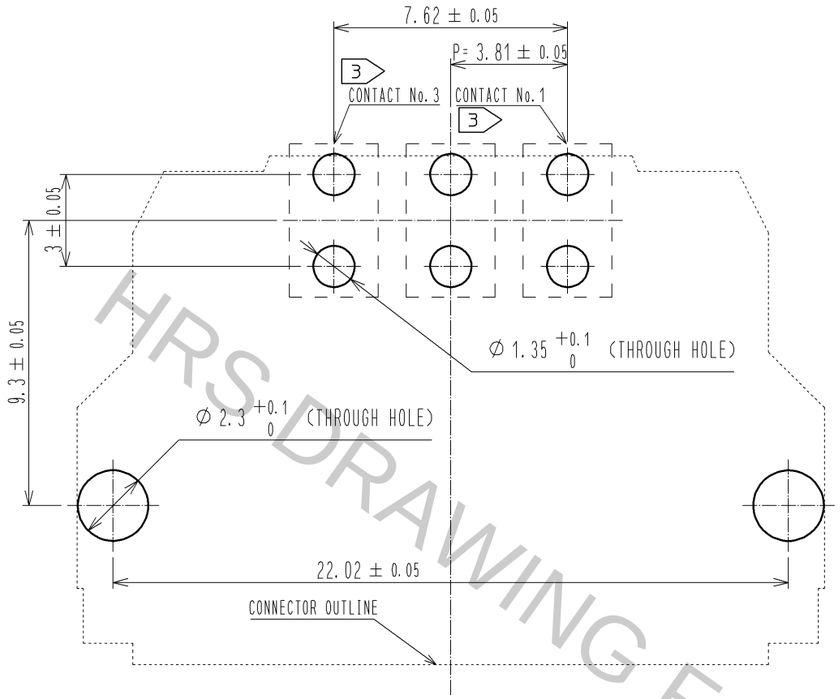

1 DRAWING FOR PACKAGING(1:2)

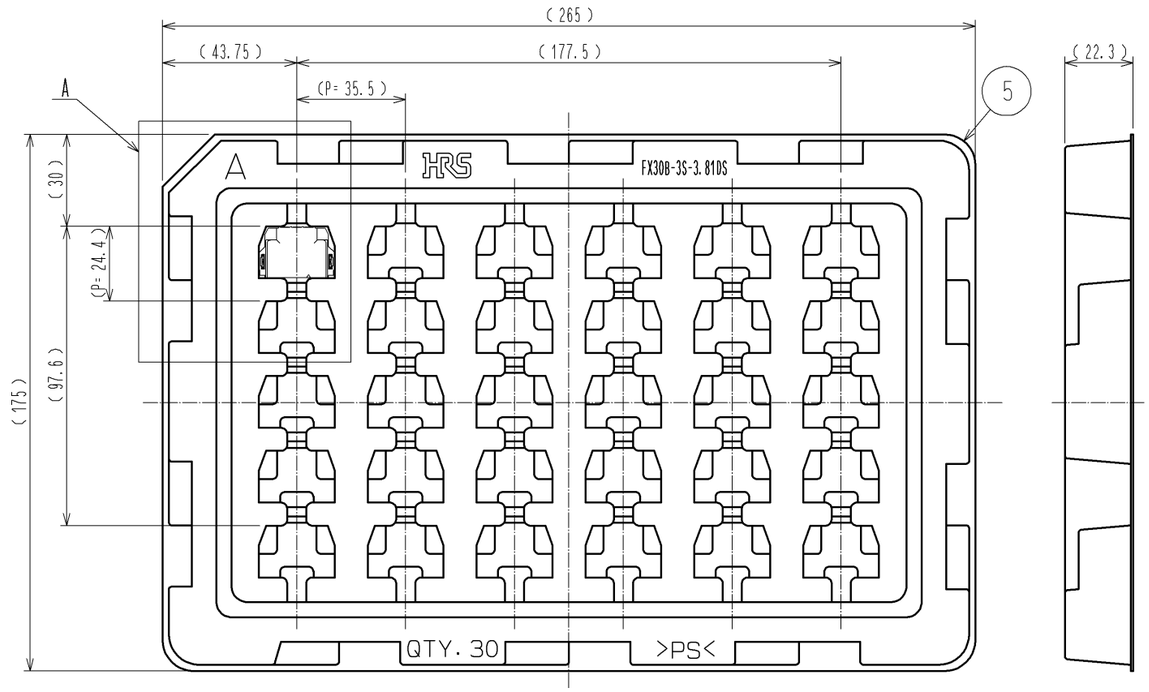

A(1:1)

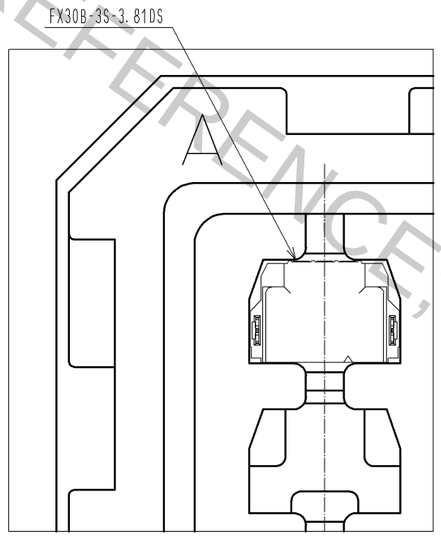

HRS DRAWING FOR REFERENCE

HRS	DRAWING NO.	EDC3-347277-00
	PART NO.	FX30B-3S-3.81DS
	CODE NO.	CL570-3601-9-00 △ 2/2