Aug.1.2016 Copyright 2016 HIROSE ELECTRIC CO., LTD. All Rights Reserved.

	COUNT	DESCRIPTION OF REVISIONS	BY	CHKD	DATE		COUNT	DESCRIPTION OF REVISIONS	BY	CHKD	DATE
△					. .	△					. .
△					. .	△					. .
△					. .	△					. .

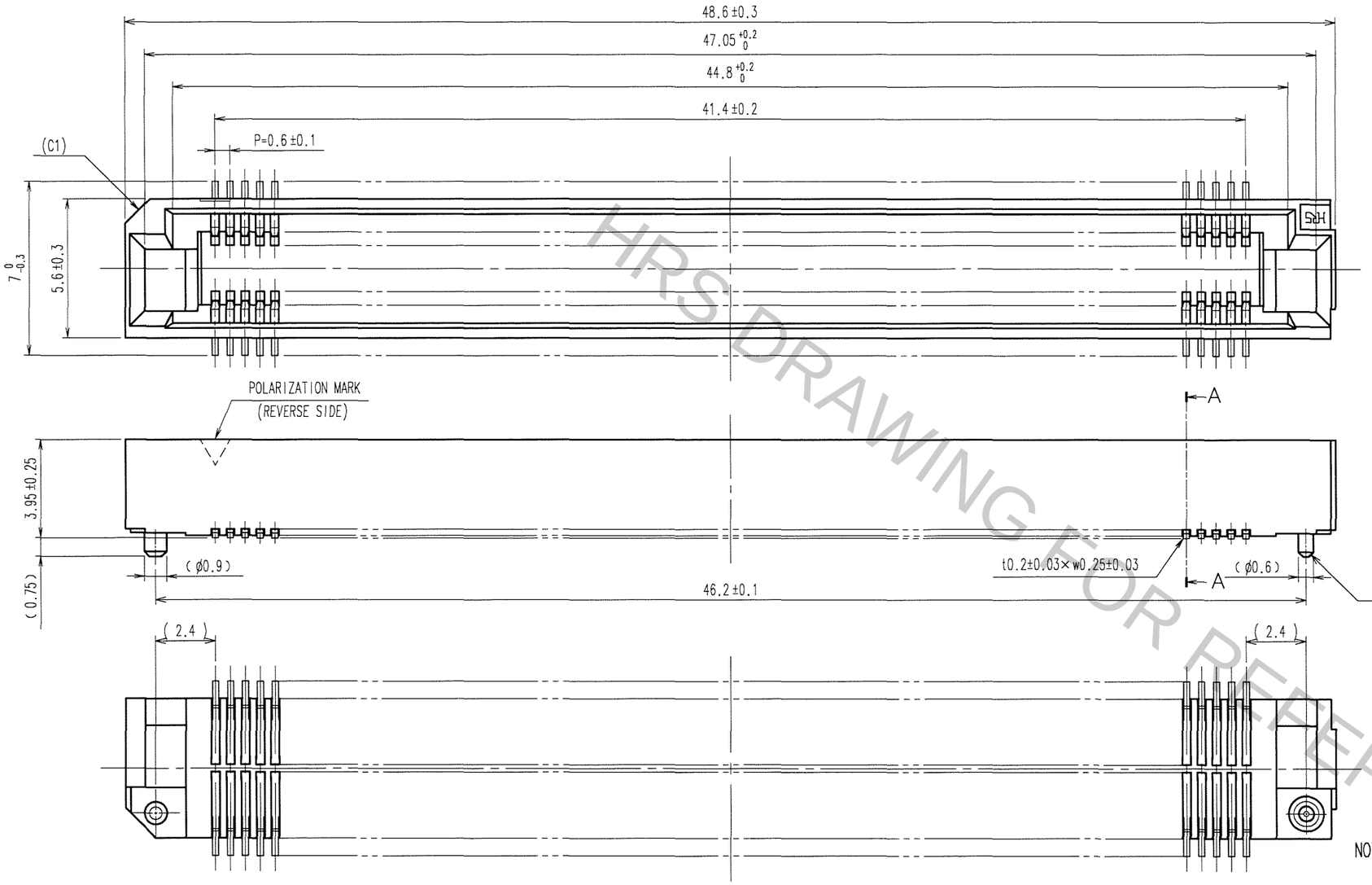

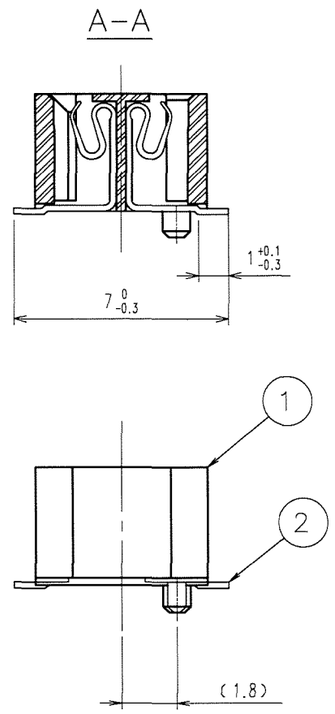

NOTE 1. LEAD CO-PLANARITY SHALL BE 0.1mm MAX.
2. FOR MODIFICATION,ETC.,PREVENTIVE HOLE FOR SINK MARK MAY BE ADDED ACCORDING TO CIRCUMSTANCES.
3. THE DIMENSIONS IN PARENTHESES ARE FOR REFERENCE.

RECOMMENDED LAND PATTERN DIMENSION OF PCB (MOUNTING SIDE) (2:1)

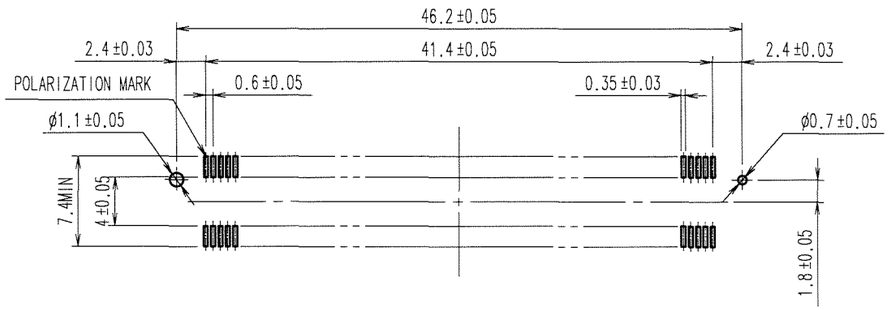

NO.	MATERIAL	FINISH, REMARKS	NO.	MATERIAL	FINISH, REMARKS
1	PPS	LIGHT BROWN (UL94V-0)	2	PHOSPHOR BRONZE	CONTACT AREA:GOLD 0.1μm min. LEAD AREA:GOLD FLASH UNDER PLATING:NICKEL 1.5μm min.

CODE NO.(OLD)	DRAWN	DESIGNED	CHECKED	APPROVED	RELEASED
CL	K.NAKAMURA 06.03.16	K.NAKAMURA 06.03.16	H.Ogawa '06.03.17	H.Okawa 06.03.17	. .

SCALE 5 : 1 UNITS mm	DRAWING NO. EDC3-150885-25	PART NO. FX8C-140S-SV(71)
	HRS HIROSE ELECTRIC CO., LTD	CODE NO. CL578-0807-9-71 1/1

TO
PCK

HRS DRAWING FOR REFERENCE