Aug.1.2016 Copyright 2016 HIROSE ELECTRIC CO., LTD. All Rights Reserved.

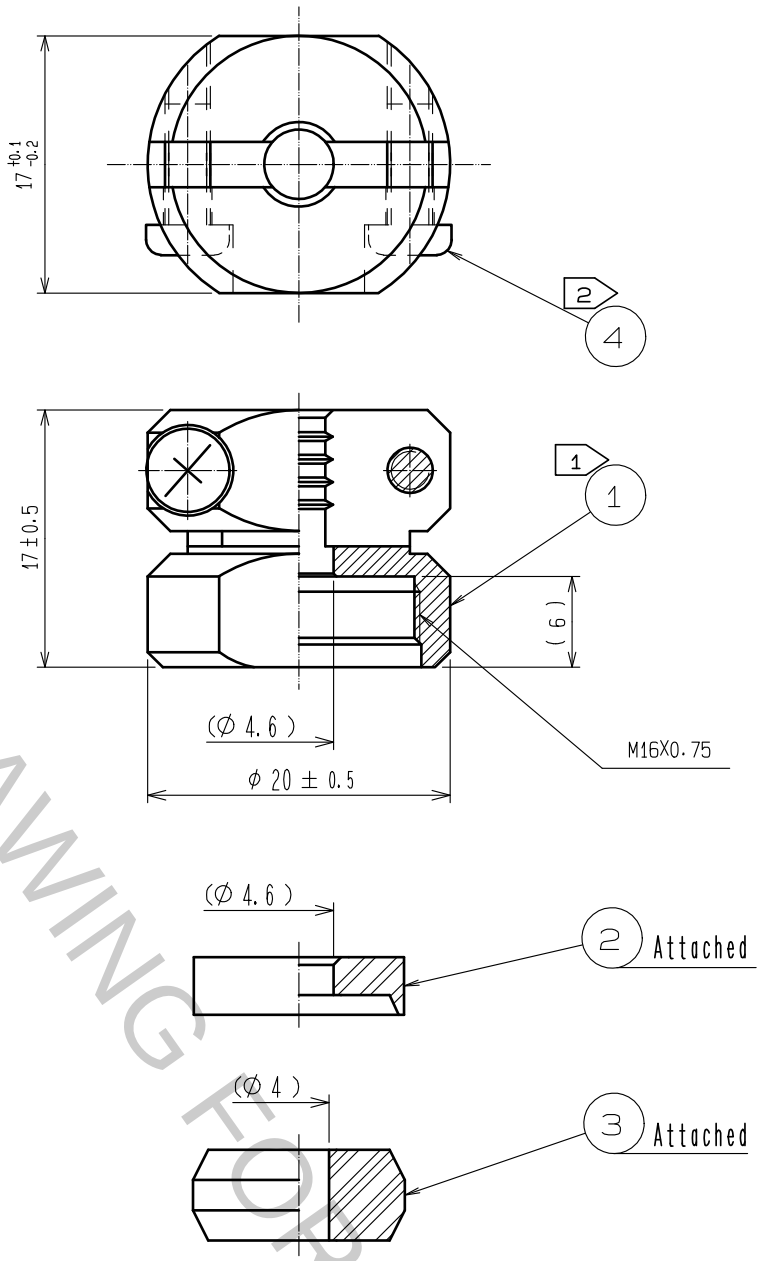

HRS DRAWING FOR REFERENCE

Notes 1 The recommended clamp trque of REF. No ① to be 2 to 2.5 N・m.
LOCTITE 263, HENKEL JAPAN or equicalent is recommended to prevent REF. No.① form loosening.

2 The recommended clamp trque of REF. No.④ to be 0.65 to 0.7 N・m.

3 Sealing and airtightness and oil resisting shall be tested under mated condition with an applicable connector.

NO.	MATERIAL	FINISH . REMARKS	NO.	MATERIAL	FINISH . REMARKS
2	POLYPHENYLENE SULFIDE	(BLACK) UL94V-0	4	STAINLESS STEEL	M3×0.5×8
1	BRASS	BLACK CHROME PLATING	3	ACRYLONITRILE BUTADIENE RUBBER	(GRAY)

UNITS mm	SCALE 2 : 1	COUNT	DESCRIPTION OF REVISIONS	DESIGNED	CHECKED	DATE
		0				

HIROSE ELECTRIC CO., LTD.

APPROVED	HY. KOBAYASHI	15. 08. 04
CHECKED	HY. KOBAYASHI	15. 08. 04
DESIGNED	HY. KISHI	15. 08. 04
DRAWN	HY. KISHI	15. 08. 04

DRAWING NO. EDC-110594-71-00
PART NO. JR13WCC-4(71)
CODE NO. CL114-2045-0-71
0 1/1

FORM HC0011-5-51