Aug.1.2016 Copyright 2016 HIROSE ELECTRIC CO., LTD. All Rights Reserved.

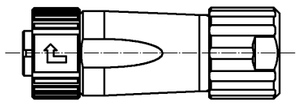

6 Fig.2(1:1)

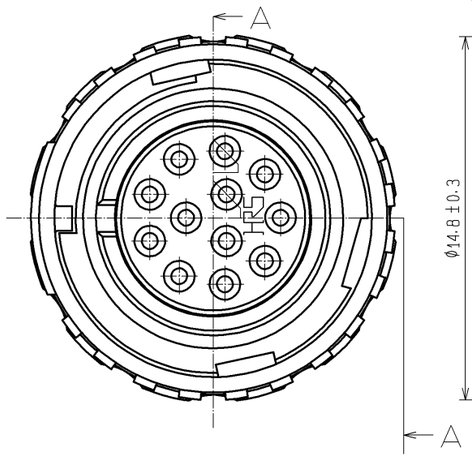

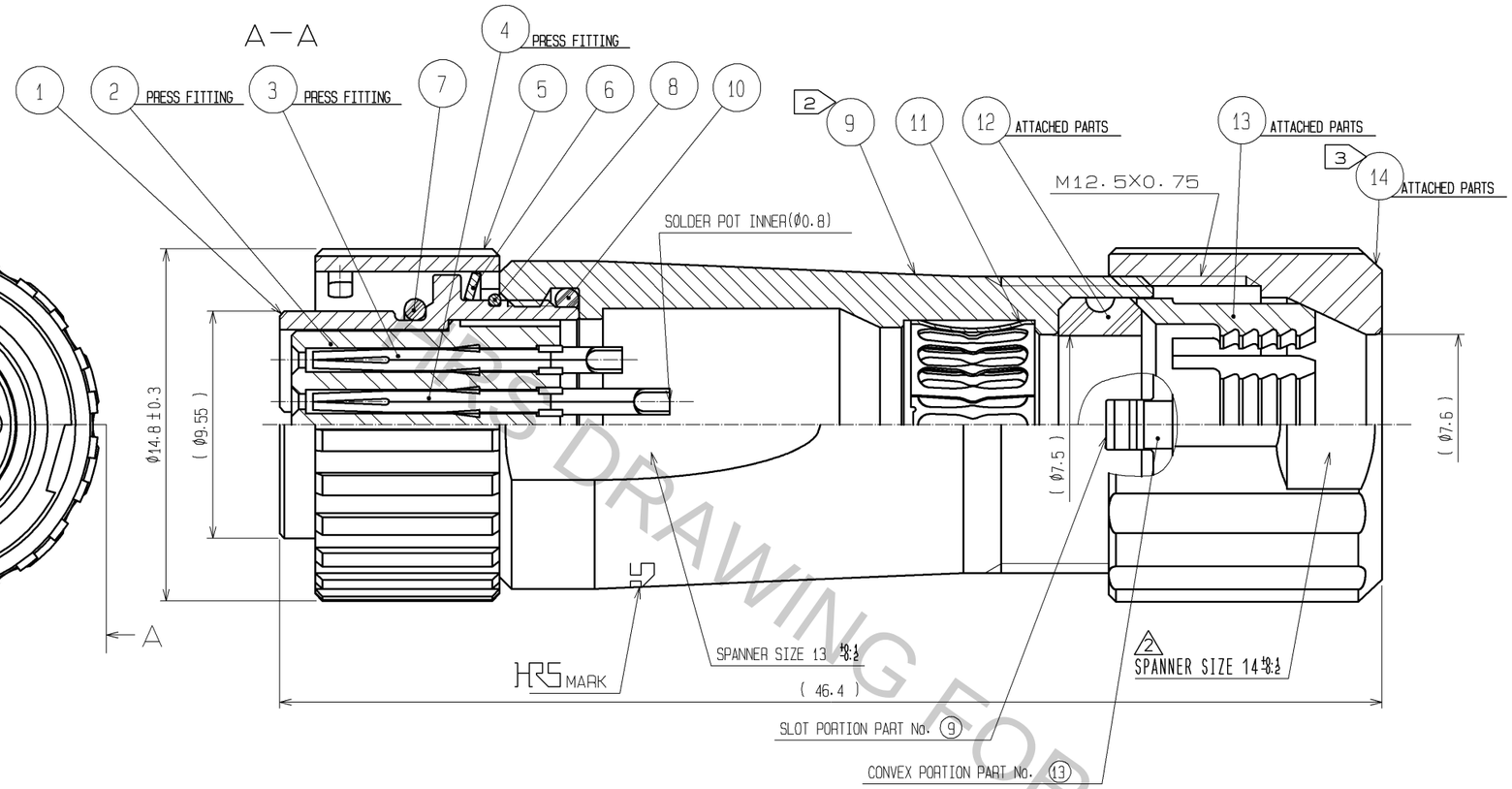

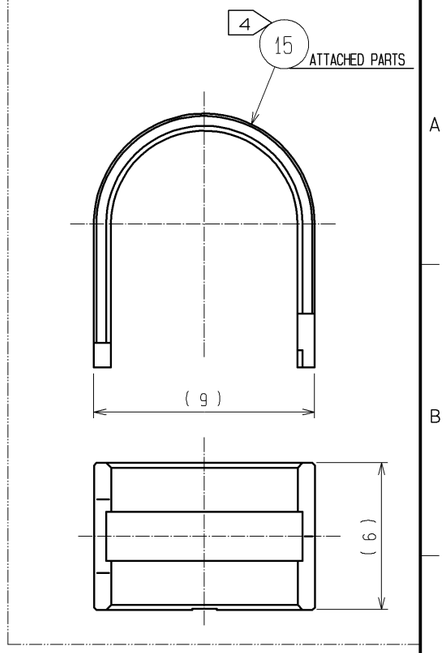

Fig.1(2:1)

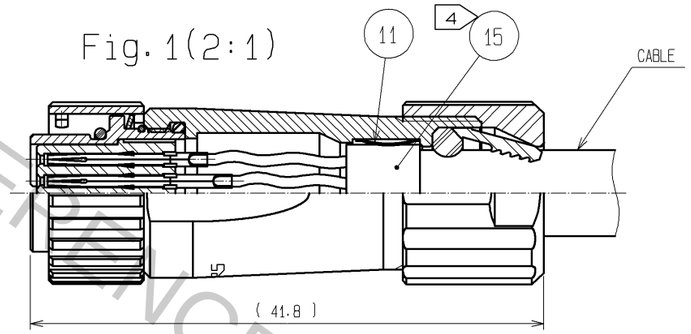

NOTES
1 PLATING(REF.NO.③,④)
CONTACT AREA : GOLD 0.2μm min
OTHERS : GOLD AND NICKEL
UNDER PLATING : NICKEL 2μm min
2 2 THE RECOMMENDED CLAMP TORQUE OF REF.NO.⑨ TO BE 1 TO 1.5N·m.
THREAD LOCKER TO THE THREADED PORTION OF REF.NO.① IS RECOMMENDED TO PREVENT REF.NO.⑨ FROM LOOSING.
RECOMMENDED THREAD LOCKER : LOCTITE 263, HENKEL JAPAN LTD.
2 1 3 THE RECOMMENDED CLAMP TORQUE OF REF.NO.⑭ TO BE 0.8 TO 1N·m.
THREAD LOCKER AND LOCK PRIMER TO THE THREADED PORTION M12.5X0.75 OF REF.NO.⑨ IS RECOMMENDED TO PREVENT REF.NO.⑭ FROM LOOSING.
RECOMMENDED THREAD LOCKER AND LOCK PRIMER : LOCTITE 263, LOCK PRIMER 7649, HENKEL JAPAN LTD.
4 FASTEN REF.NO.⑮ TO THE CABLE WITH THE CABLE CRIMPING TOOL.
AND MAKE REF.NO.⑮ CONTACT WITH REF.NO.⑪(REFER TO Fig.1).
REFER TO THE TECHNICAL SPECIFICATION ATAD-C0099 FOR DETAILS.
APPLICABLE CABLE CRIMPING TOOL : LF-TC-01 (CL150-0234-6)
5 APPLICABLE CABLE ASSEMBLY FIXTURE : LF10BP-T01 (CL150-0235-9)
CABLE ASSEMBLY FIXTURE IS USED AS A RECEPTACLE STAND OF EXTRACT AND THE PART NUMBER ① OF AN ASSEMBLY.
6 Fig.2 SHOWS THE APPEARANCE AFTER ASSEMBLY.
1 7 ROTATION EXAMPLES OF REF. NOS.⑤, ⑨ AND ⑭ TO ① ARE SHOWN.
2 8 CABLE PULL FORCE, TWISTING STRENGTH, WATER TIGHTNESS AND OTHER CHARACTERISTICS MAY DIFFER DEPENDING ON CABLE SPECIFICATIONS AND STRUCTURE.
PLEASE EVALUATE UNDER THE ACTUAL CONDITIONS PRIOR TO USE.

NO.	MATERIAL	FINISH , REMARKS	NO.	MATERIAL	FINISH , REMARKS
8	STAINLESS STEEL				
7	CHLOROPRENE RUBBER	(BLACK)	15	BRASS	NICKEL PLATING
6	STAINLESS STEEL		14	PPS	(NATURAL, BROWN) UL94V-0
5	ZINC ALLOY	NICKEL PLATING	13	POLYAMIDE	(NATURAL, MILKY WHITE) UL94V-0
4	PHOSPHOR BRONZE	1	12	CHLOROPRENE RUBBER	(BLACK)
3	PHOSPHOR BRONZE	1	11	PHOSPHOR BRONZE	NICKEL PLATING
2	PPS	(BLACK) UL94V-0	10	CHLOROPRENE RUBBER	(BLACK)
1	ZINC ALLOY	NICKEL PLATING	9	ZINC ALLOY	NICKEL PLATING

UNITS	SCALE		COUNT	DESCRIPTION OF REVISIONS	DESIGNED	CHECKED	DATE
mm	4 : 1	2	4	DIS-C-003545	KN. IKEHARA	EJ. KUNII	14.07.18

HRS HIROSE ELECTRIC CO., LTD.

APPROVED	: MR. YOSHIDA	05.01.05	DRAWING NO.	EDC3-114242-00
CHECKED	: MO. SATOH	05.01.05	PART NO.	LF10WBP-12S
DESIGNED	: YH. YAMADA	05.01.05	CODE NO.	CL136-0007-8-00
DRAWN	: YH. YAMADA	05.01.05		2 1/1

HRS DRAWING FOR REFERENCE