Aug.1.2016 Copyright 2016 HIROSE ELECTRIC CO., LTD. All Rights Reserved.

6 Fig.2(1:1)

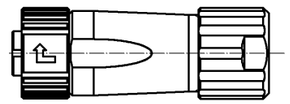

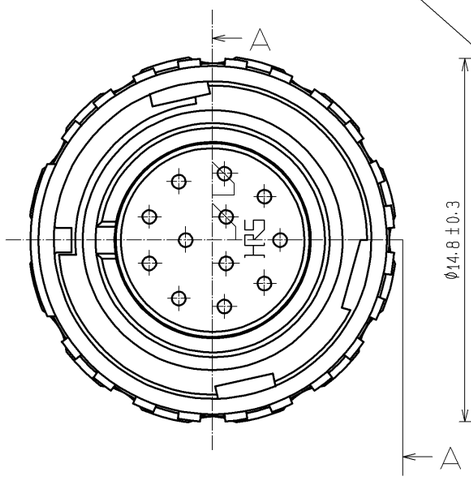

A−A

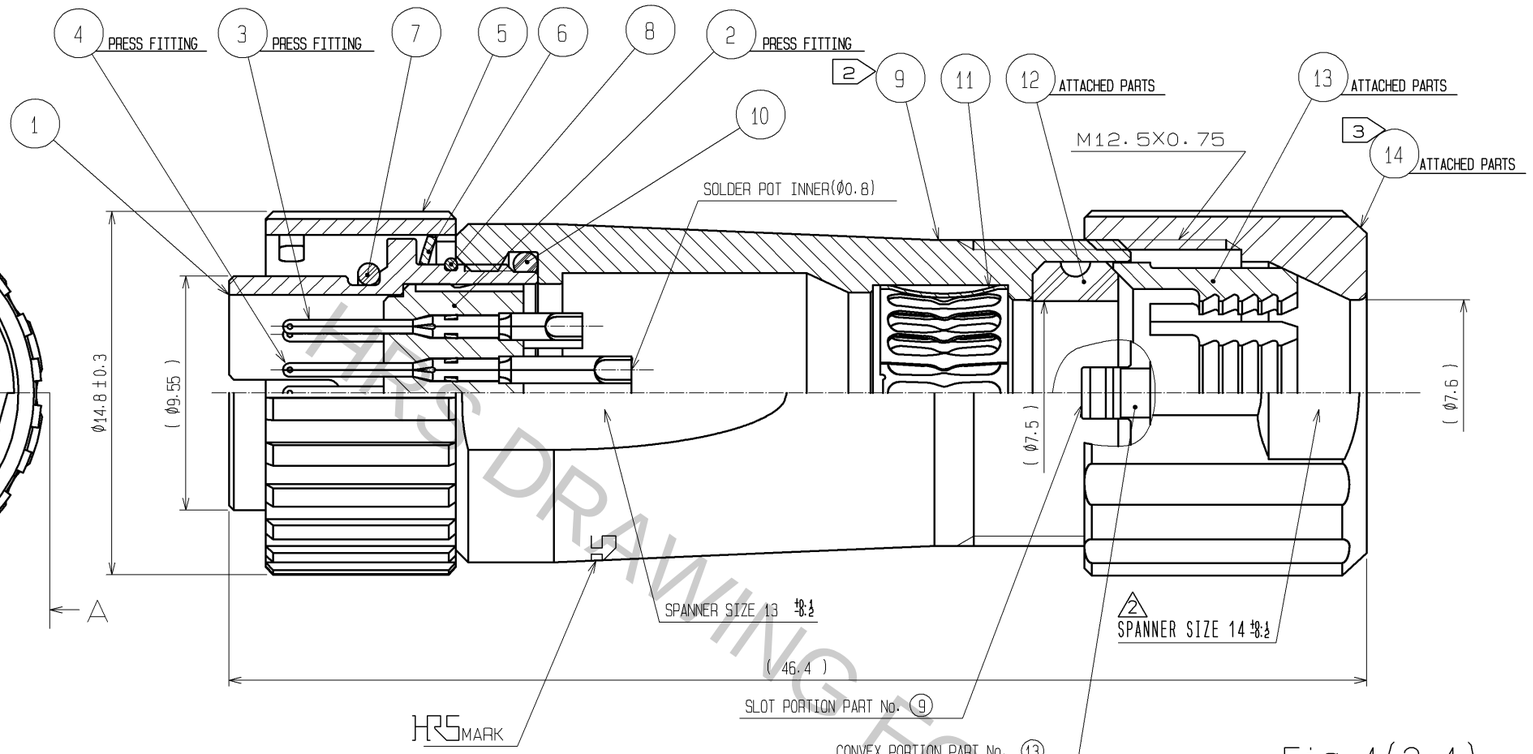

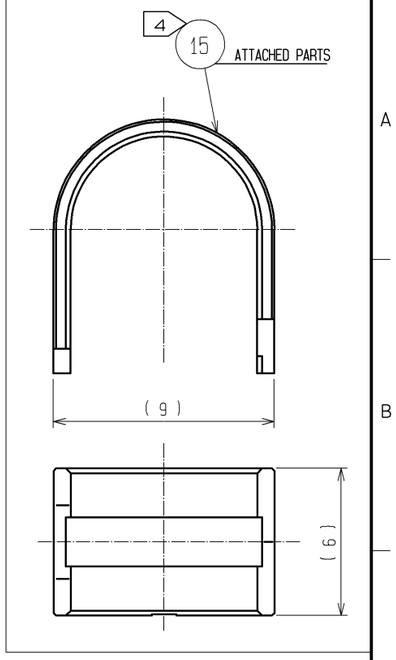

Fig.1(2:1)

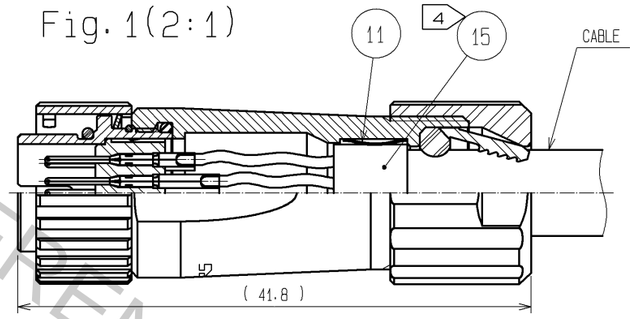

NOTES
1 PLATING(REF.NO. 3, 4)
CONTACT AREA : GOLD 0.2μm min
OTHERS : GOLD AND NICKEL
UNDER PLATING : NICKEL 2μm min

2 2 THE RECOMMENDED CLAMP TORQUE OF REF.NO. 9 TO BE 1 TO 1.5N·m.
THREAD LOCKER TO THE THREADED PORTION OF REF.NO. 1 IS RECOMMENDED TO PREVENT REF.NO. 9 FROM LOOSING.
RECOMMENDED THREAD LOCKER : LOCTITE 263, HENKEL JAPAN LTD.

2 1 3 THE RECOMMENDED CLAMP TORQUE OF REF.NO. 14 TO BE 0.8 TO 1N·m.
THREAD LOCKER AND LOCK PRIMER TO THE THREADED PORTION M12.5X0.75 OF REF.NO. 9 IS RECOMMENDED TO PREVENT REF.NO. 14 FROM LOOSING.
RECOMMENDED THREAD LOCKER AND LOCK PRIMER : LOCTITE 263, LOCK PRIMER 7649, HENKEL JAPAN LTD.

4 FASTEN REF.NO. 15 TO THE CABLE WITH THE CABLE CRIMPING TOOL.
AND MAKE REF.NO. 15 CONTACT WITH REF.NO. 11 (REFER TO Fig.1).
REFER TO THE TECHNICAL SPECIFICATION ATAD-C0099 FOR DETAILS.
APPLICABLE CABLE CRIMPING TOOL : LF-TC-01 (CL150-0234-6)

5 APPLICABLE CABLE ASSEMBLY FIXTURE : LF10BP-T01 (CL150-0235-9)
CABLE ASSEMBLY FIXTURE IS USED AS A RECEPTACLE STAND OF EXTRACT AND THE PART NUMBER 1 OF AN ASSEMBLY.

6 Fig.2 SHOWS THE APPEARANCE AFTER ASSEMBLY.

1 7 ROTATION EXAMPLES OF REF. NOS. 5, 9 AND 14 TO 1 ARE SHOWN.

2 8 CABLE PULL FORCE, TWISTING STRENGTH, WATER TIGHTNESS AND OTHER CHARACTERISTICS MAY DIFFER DEPENDING ON CABLE SPECIFICATIONS AND STRUCTURE.
PLEASE EVALUATE UNDER THE ACTUAL CONDITIONS PRIOR TO USE.

NO.	MATERIAL	FINISH , REMARKS	NO.	MATERIAL	FINISH , REMARKS
8	STAINLESS STEEL				
7	CHLOROPRENE RUBBER	(BLACK)	15	BRASS	NICKEL PLATING
6	STAINLESS STEEL		14	PPS	(NATURAL, BROWN) UL94V-0
5	ZINC ALLOY	NICKEL PLATING	13	POLYAMIDE	(NATURAL, MILKY WHITE) UL94V-0
4	COPPER ALLOY	1	12	CHLOROPRENE RUBBER	(BLACK)
3	COPPER ALLOY	1	11	PHOSPHOR BRONZE	NICKEL PLATING
2	PPS	(BLACK) UL94V-0	10	CHLOROPRENE RUBBER	(BLACK)
1	ZINC ALLOY	NICKEL PLATING	9	ZINC ALLOY	NICKEL PLATING

UNITS	SCALE		COUNT	DESCRIPTION OF REVISIONS	DESIGNED	CHECKED	DATE
mm	4 : 1	2	4	DIS-C-003545	KN. IKEHARA	EJ. KUNII	14.07.18

HRS HIROSE ELECTRIC CO., LTD.

APPROVED : MR. YOSHIDA	05.01.05	DRAWING NO. EDC3-114243-00
CHECKED : MO. SATOH	05.01.05	PART NO. LF10WBP-12P
DESIGNED : YH. YAMADA	05.01.05	
DRAWN : YH. YAMADA	05.01.05	CODE NO. CL136-0008-0-00 2 1/1

HRS DRAWING FOR REFERENCE