Aug.1.2016 Copyright 2016 HIROSE ELECTRIC CO., LTD. All Rights Reserved.

	COUNT	DESCRIPTION OF REVISIONS	BY	CHKD	DATE		COUNT	DESCRIPTION OF REVISIONS	BY	CHKD	DATE
△					. .	△					. .
△					. .	△					. .
△					. .	△					. .

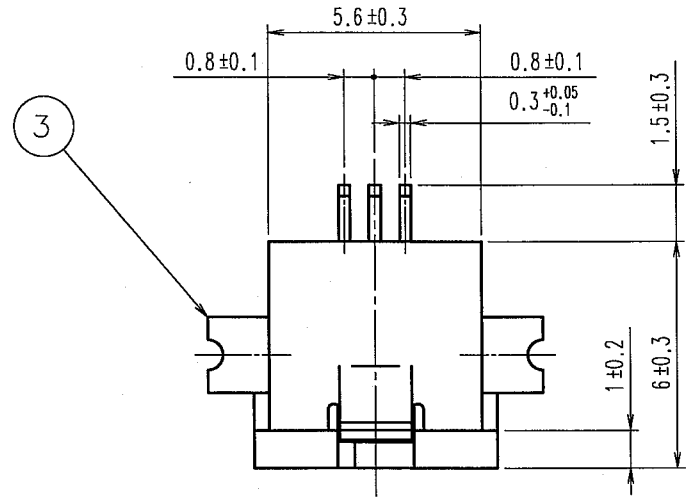

1 CHART-1 POLARIZATION

POLARIZATION
No.1…(+) POWER
No.2…(+) SIGNAL
No.3…(−) POWER

3 FIXED BY EQUIPMENT (REFERENCE)

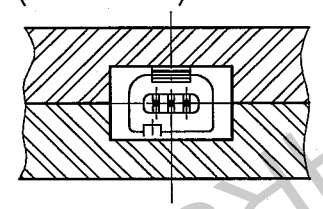

RECOMMENDED PCB PATTERN

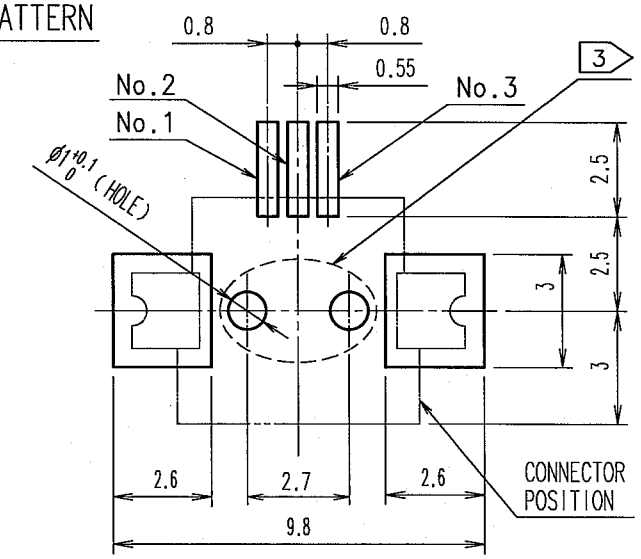

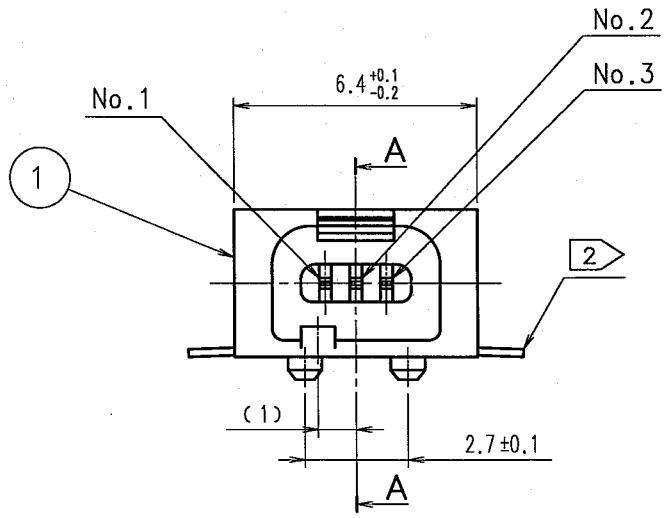

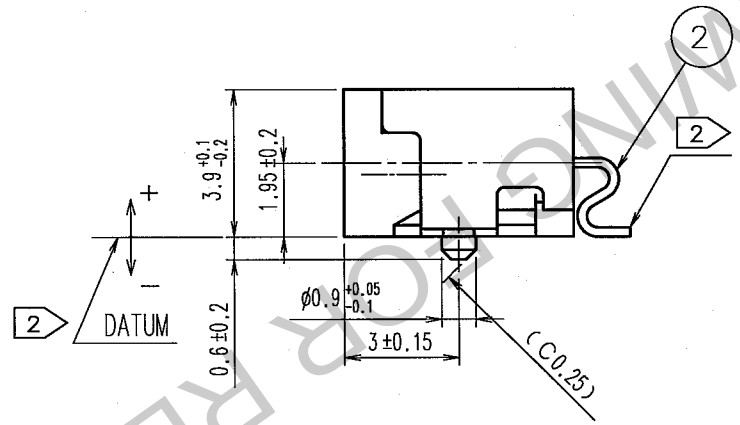

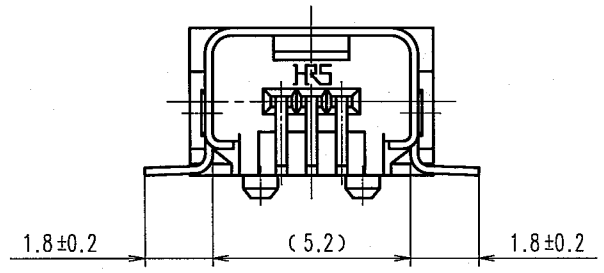

A–A

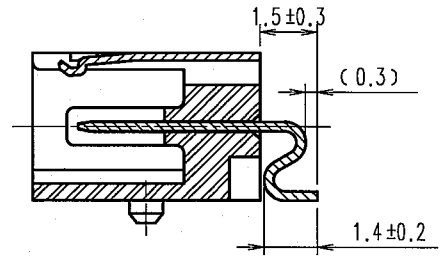

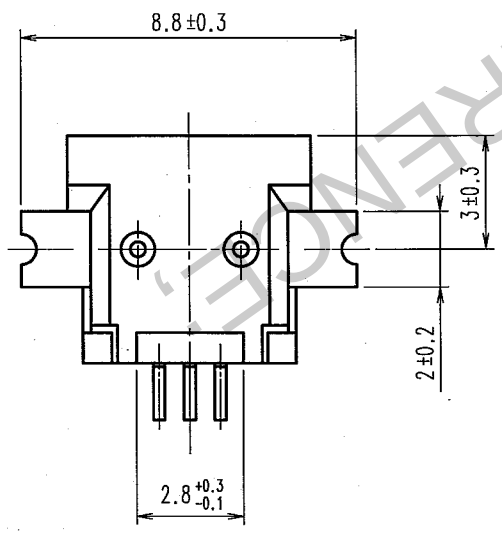

NOTES
1. POLARIZATION IS AS SHOWN ON CHART-1.
2. COPLANARITY(INCLUDING METAL FITTING)SHALL BE 0-0.15 FROM DATUM.
3. FIXING TO PCB OF THIS PRODUCT IS SOLDER TYPE.
   WE RECOMMEND TO USE ADHESIVE ON PCB SURFACE.
   PLEASE ALSO FIX THIS PRODUCT BY THE BODY DF EQUIPMENT ITSELF.
4. DIRECTIONS FOR USE.
   · PLEASE DO NOT USE FOR THE PURPOSE OF INTERRUPTING THE CURRENT.

NO.	MATERIAL	FINISH, REMARKS
2	COPPER ALLOY	CONTACT AREA PALLADIOM NICKEL 0.7μm min. +GOLD 0.2μm min. LEAD AREA GOLD 0.03μm min. UNDER PLATING NICKEL 1.27μm min.
1	PA	BLACK UL94V-0
3	STAINLESS STEEL	GOLD PLATING 0.03μm min. UNDER PLATING NICKEL 0.2μm min.

CODE NO.(OLD)	DRAWN	DESIGNED	CHECKED	APPROVED	RELEASED
CL	H.Kitakuchi 05.08.30	H.Kitakuchi 05.08.30	H.Hobayashi '05.08.30	05.08.30	. .

SCALE 5 : 1	DRAWING NO. EDC3-120677-03	PART NO. MQ172-3PA(55)
UNITS mm	HRS HIROSE ELECTRIC CO., LTD	CODE NO. CL206-0950-4-55 1/1

TO

HRS DRAWING FOR REFERENCE