Aug.1.2016 Copyright 2016 HIROSE ELECTRIC CO., LTD. All Rights Reserved.

	COUNT	DESCRIPTION OF REVISIONS	BY	CHKD	DATE		COUNT	DESCRIPTION OF REVISIONS	BY	CHKD	DATE
△					. .	△					. .
△					. .	△					. .
△					. .	△					. .

NOTE
1 APPLICABLE CRIMP CONTACT : RP34L-SC1-212(01)(CL113-5151-8-01).
2 APPLICABLE CRIMP CONTACT EXTRACTION TOOL : RP6-SC-TP(CL150-0039-0).
3 APPLICABLE CRIMPING JIG : RP34-TC-01(CL150-0074-1).
4 THIS PRODUCT DISASSEMBLED WHEN DELIVERED.

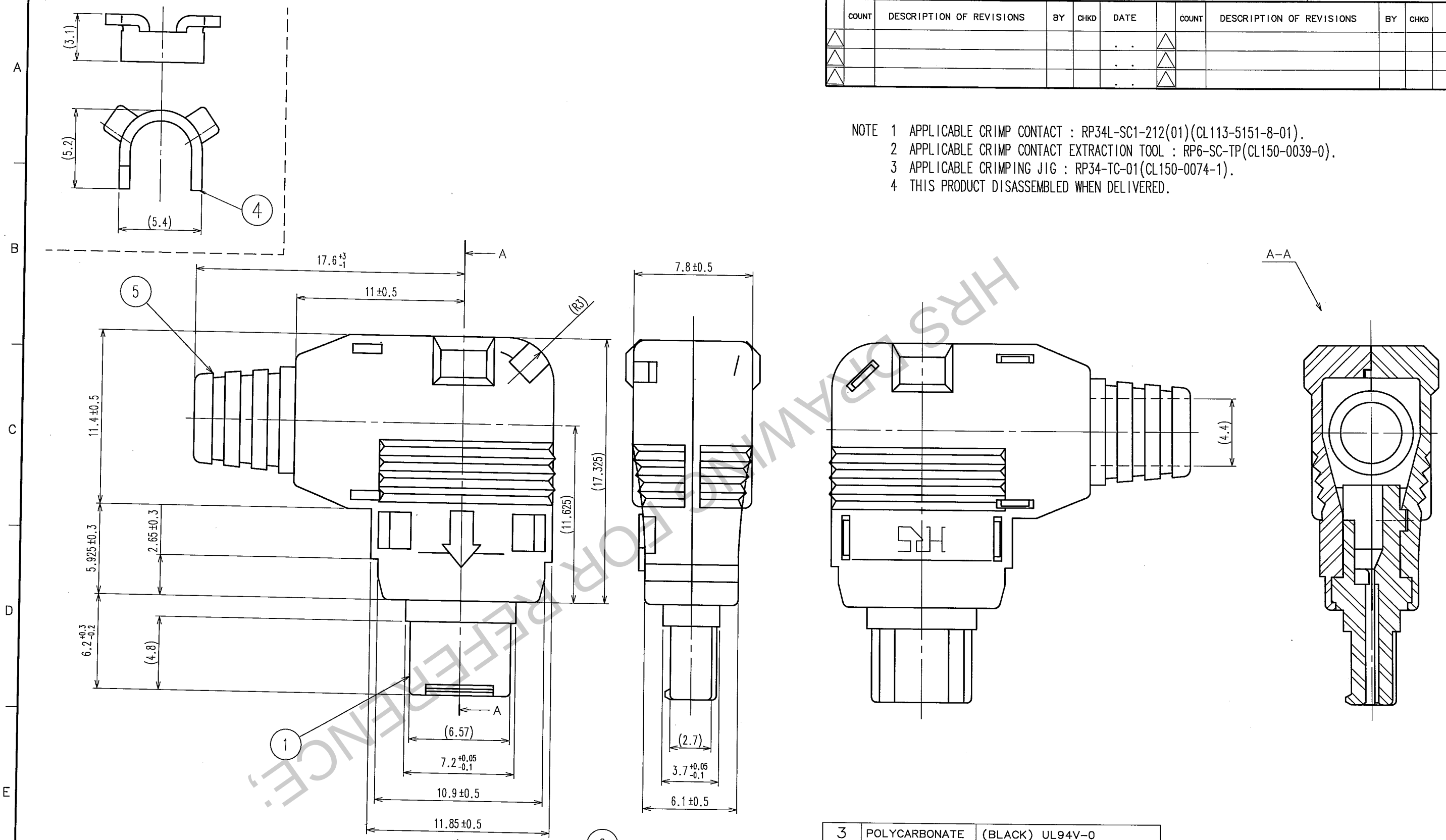

HRS DRAWING FOR REFERENCE.

NO.	MATERIAL	FINISH, REMARKS	NO.	MATERIAL	FINISH, REMARKS
3	POLYCARBONATE	(BLACK) UL94V-0			
2	POLYCARBONATE	(BLACK) UL94V-0	5	VINYLE	(BLACK) UL94V-0
1	PPS	(BLACK) UL94V-0	4	BRASS	

CODE NO.(OLD)	DRAWN	DESIGNED	CHECKED	APPROVED	RELEASED
CL	H. Ishihara 05.9.26	E. Yamino 05.09.26	H. Zemba 05.09.26	M. Sato 05.09.28	. .

SCALE 4 : 1	DRAWING NO. EDC3-111810-71	PART NO. RP34L-5LP-3SC(71)
UNITS mm	HRS HIROSE ELECTRIC CO., LTD	CODE NO. CL113-5161-1-71 1/1

TO
R